THE

WIRELESS ENGINEER

AND

EXPERIMENTAL WIRELESS

NUMBER 110 VOLUME IX NOVEMBER 1932

A JOURNAL OF

RADIO RESEARCH

AND

PROGRESS

2/6 NET

PUBLISHED BY

ILIFFE & SONS LTD.

DORSET HOUSE TUDOR STREET LONDON E.C.4

Built up to the standard the technician demands . . .

● ● ● In a Dubilier Condenser you will find that every feature conforms to the very highest standards of condenser practice. That is why the leading Set designers specify Dubilier, for in the condensers bearing this name they find everything they demand from a condenser.

No matter what are your Mica condenser requirements, in the Dubilier range you will find your needs completely met—and you can rest assured that you have definitely the finest condenser in the world.

● On the left is the Dubilier Type B.775 Mica Condenser, for power amplifiers and transmitters. Types B.770/1/2 and B.775/6/7 are available in prices from 3/- to 37/6.

● On the right is the Dubilier Type 665 Mica Condenser. In capacities from .0001 to .0005 *m*F. Prices 6d and 9d.
Also shown is the Dubilier Type 670 Mica Condenser. In capacities from .0001 to .01 *m*F. Prices from 1/- to 2/-.

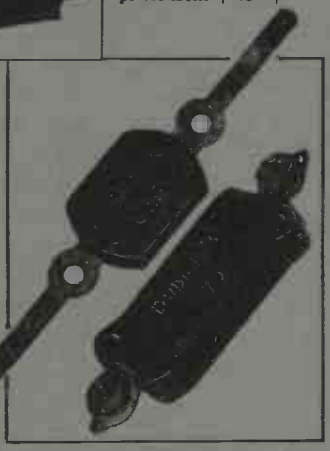

Write for copy of new booklet, "Choosing your Condensers & Resistances"

DUBILIER

MICA CONDENSERS

DUBILIER CONDENSER CO. (1925) LTD.
Ducon Works, Victoria Road, N. Acton, London, W.3

RADIO DATA CHARTS

A SERIES OF ABACS

providing most of the essential Data required in Receiver Design.

By R. T. BEATTY, M.A., B.E., D.Sc.
(1930)

"Radio Data Charts" provide designers of wireless apparatus with a ready and convenient means of solving problems without having recourse to complicated formulæ and mathematics.

By the use of the charts it is possible to tackle all the more familiar problems in radio receiver design; including, for example, finding the relationship between inductance capacity and frequency, and working out the design of high frequency transformers. All keen amateurs will appreciate this helpful book.

(39 *CHARTS and more than* 50 *Diagrams.*)

Price 4/6 net. By post 4/10

From all leading booksellers or direct from the publishers.

Published from the Offices of "THE WIRELESS WORLD," W.E.11.

Dorset House, Tudor Street, London, E.C.4.

The Wireless World

covers every wireless interest —Provides reliable information on wireless developments — Gives descriptions of new and thoroughly tested sets with full constructional details— Publishes reviews of receivers and Laboratory reports on valves and components, and the complete weekly Programmes from all Foreign Stations.

EVERY FRIDAY

4D

From all Newsagents & Bookstalls

ILIFFE & SONS LIMITED
Dorset House, Tudor Street, London, E.C.4

W.E.4

CLAUDE LYONS, LTD

Head Offices: 76 OLDHALL STREET, LIVERPOOL

London Offices: 40 BUCKINGHAM GATE, S.W. 1

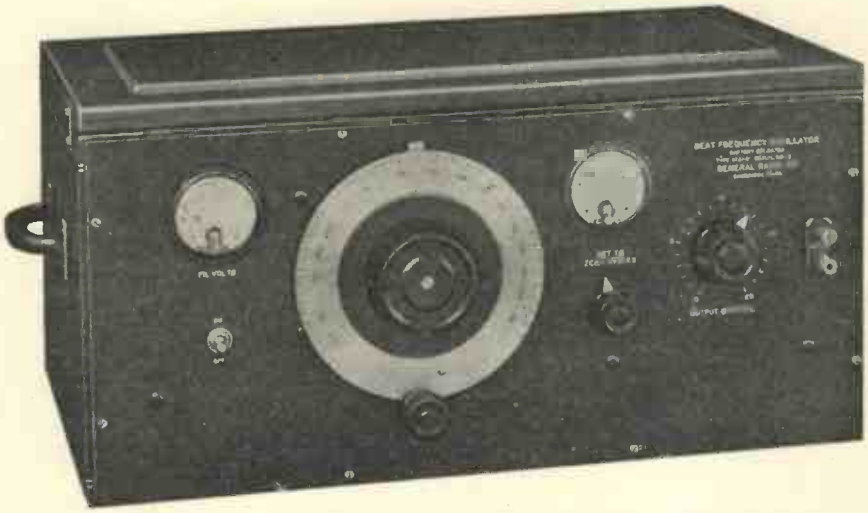

A NEW BEAT-FREQUENCY OSCILLATOR

BY "GENERAL RADIO"; MODEL 613-A.

For very many years we have been selling "G.R." Beat-Frequency Oscillators. The new GR Model 613-A is the fourth absolutely self-contained instrument of this pattern designed by this World-Famous Firm of Laboratory Instrument Manufacturers.

All these years of accumulated experience, combined with the immense manufacturing facilities of this interesting Company, are well represented in this latest Oscillator, for it has a performance which is unapproachable. Every essential feature will be found incorporated. Every pitfall in the seemingly simple evolution of the perfect Beat-Oscillator has been most carefully avoided.

The Instrument is described in the "EXPERIMENTER," May 1932 Issue, Vol. VI, No. 12. If you have not got details you are evidently not on our monthly mailing list for the regular receipt of this little Journal, which, like the "WIRELESS ENGINEER," may also justly be termed "A journal of Radio Research and Progress."

A postcard request to-day will ensure receipt of the "EXPERIMENTER" regularly, free and post free. Over two thousand British Research Engineers, Works Managers, Government Officials, University Professors, or Laboratory Assistants already receive it. Why not you, too? Indeed, you cannot afford to be without it.

The essential characteristics of this Oscillator are the ability to maintain a constant output voltage of exceedingly pure wave-form over a wide frequency sweep, and with but one frequency control. This has been assured by a special straight-line-frequency Condenser and a very large Dial, having a logarithmic scale spread around 270°. This scale is very "open" and read with ease at all points. There is no necessity for reference to any curves or charts which, at the best, in an instrument of this type, are "makeshifts."

As some frequency drift is inevitable in a beat-oscillator, some means must be provided for instantly both detecting and amending this. Means are therefore provided and, within a second or two, the instrument can be checked and brought back to calibration, *with an accuracy of one cycle* over its frequency sweep of from 5 cps. to 11,000 cps.

The output does not contain spurious high frequencies. The harmonic content between 100 and 10,000 cycles does not exceed 2 per cent. The instrument is entirely self-contained and easily portable. *It is very reasonable in price, and delivery is immediate, ex stock, Liverpool Depôt.*

WAVEMETERS
CONDENSERS
INDUCTANCES

We are now in a position to deliver **from stock** :—

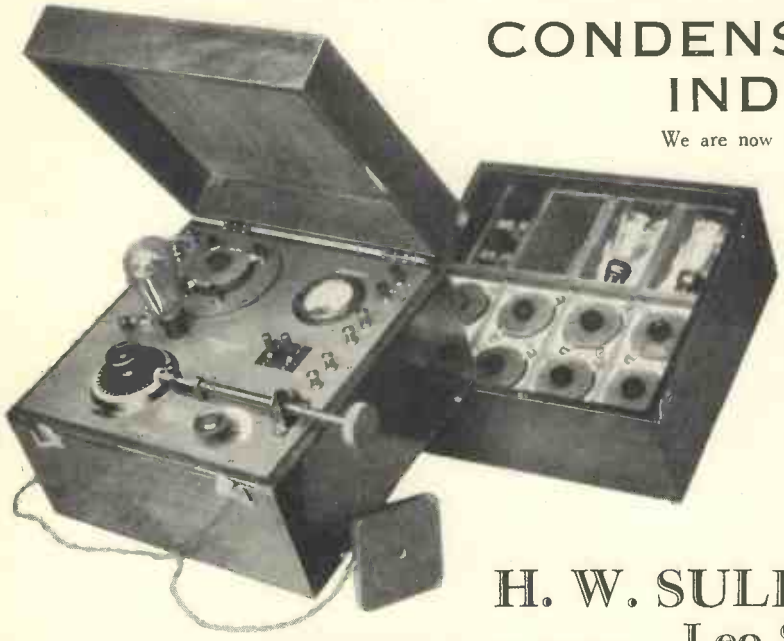

Wavemeters—Heterodyne type of all accuracies.

Condensers — Lab. or Precision Grades, both variable and fixed, with air or mica dielectric.

Inductances— Fixed Standards on the Sullivan - Griffiths principle.

also **Inexpensive Testing Instruments**

Simple Capacity Test Sets.

Capacity Matching Sets.

H. W. SULLIVAN, LTD.,
Leo St., London, S.E.15.

T.C.C.
ALL-BRITISH
CONDENSERS
—a symbol of RELIABILITY throughout the world . . . . . .

Wherever experts meet there will be found an agreement on one fact—the supremacy of T.C.C. Condensers. Whatever their particular sphere of activity Radio Technicians, Telegraph and Cable Engineers, Electrical Power Engineers, etc., the world over specify and use T.C.C. when they need condensers of unquestioned reliability. Such is the reward reaped by T.C.C. for their insistence in concentrating their every effort towards the improvement of the one product alone—condensers.

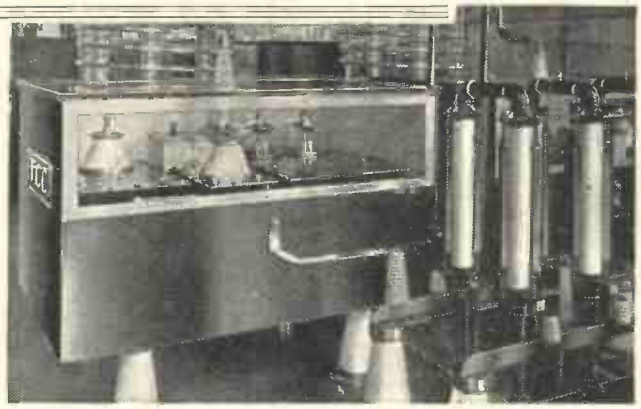

An example of the wide range of T.C.C. activities. A T.C.C. condenser installed at the Prague broadcaster—the world's largest medium wave station—and, on the right, a 2 mfd. T.C.C. High Voltage Smoothing Condenser Type 95 tested 1,000 V.D.C. for 500 V.D.C. working. Price 7s. Made in capacities from 0.1 mfd. to 10 mfd.

The Telegraph Condenser Co., Ltd., Wales Farm Rd., N. Acton, W.3.

C1467

A3

The

WIRELESS ENGINEER

and EXPERIMENTAL WIRELESS

A Journal of Radio Research & Progress

Editor
HUGH S. POCOCK

Technical Editor
Prof. G. W. O. HOWE D.Sc., M.I.E.E.

VOL. IX No. 110

NOVEMBER 1932

C O N T E N T S

EDITORIAL 605

THE THEORY OF BAND-PASS FILTERS FOR RADIO RECEIVERS By C. W. Oatley, M.A., M.Sc. 608

A NOTE ON IMPEDANCE MEASUREMENT By A. T. Starr, M.A., B.Sc. 615

THE SCREEN-GRID VALVE AS FREQUENCY-CHANGER IN THE SUPER-HET By E. L. C. White, B.A. 618

A NEW TYPE OF DIRECTIVE AERIAL By T. Walmsley, M.Inst.C.E., B.Sc. 622

METHODS OF INVESTIGATING THE VIBRATIONAL FREQUENCIES OF CONICAL SHELLS AND LOUD SPEAKER DIAPHRAGMS By N. W. McLachlan, D.Sc. 626

CORRESPONDENCE 629

ABSTRACTS AND REFERENCES 632

SOME RECENT PATENTS 661

Published Monthly on the first of each month

SUBSCRIPTIONS Home and Abroad: One Year, 32/-, 6 Months, 16/-. Single Copies, 2/8 post free

Editorial Offices

116-117 FLEET STREET, LONDON, E.C.4 Telephone: City 9472 (5 lines)

Advertising and Publishing Offices

DORSET HOUSE, TUDOR STREET, LONDON, E.C.4

Telegrams: "Experiwyr Fleet London" Telephone: City 2846 (17 lines)

Branch Offices

COVENTRY
19 Hertford Street
Telegrams: "Cyclist, Coventry"
Telephone: 5210 Coventry

BIRMINGHAM
Guildhall Bldgs., Navigation St., 2
Telegrams: "Autopress, Birmingham"
Telephone: Midland 2970 (3 lines)

MANCHESTER
260 Deansgate
Telegrams: "Iliffe, Manchester"
Telephone: Blackfriars 4412 (4 lines)

GLASGOW
26B Renfield Street, C.2
Telegrams: "Iliffe, Glasgow"
Telephone: Central 4857

The Editor invites the submission of articles with a view to publication. Contributions which are not exclusive should be so described when submitted. MSS. should be addressed to the Editor, "The Wireless Engineer and Experimental Wireless," Dorset House, Tudor Street, London, E.C.4. Especial care should be taken as to the legibility of MSS. including mathematical work.

ESSENTIAL TO EVERY EXPERT

The Ferranti Multi-Range Test Set is a quality instrument of innumerable uses. It covers every D.C. measurement up to 25 amps, 250 volts, with an almost unlimited range above this by the use of external shunts and resistances.

Comprising two Ferranti Moving Coil Radio Meters—ammeter and voltmeter, the terminals are so arranged that current and voltage readings may be taken simultaneously.

Rotary switches designed to give complete immunity from contact errors. Knife edge pointers and legible scale, 110°, 2½" long, gives a wide range of readings :—

VOLTS.		AMPERES.	
0-0.1	0-10	0-0.01	0-1
0-0.5	0-50	0-0.05	0-5
0-1.	0-100	0-0.1	0-10
0-5.	0-250	0-0.5	0-25

Resistances—500 and 1,000 ohms per volt.

Accuracy, British Standard, 1st grade.

Prices (Set only) .. .. £8. 5. 0.

Complete with case, plugs and leads £10. 0. 0.

Available on Hire Purchase Terms. Write for Leaflet We526.

FERRANTI LTD. Head Office & Works, Hollinwood, Lancashire.
London: Bush House, Aldwych, W.C.2.

FERRANTI
Multi-range TEST SET

WIRELESS

DIRECTION FINDING

and DIRECTIONAL RECEPTION

By R. KEEN, B.Eng. (Hons.)

SECOND EDITION: (1927)

This volume deals with the principles of the subject and the constructional details of direction finding installations, and includes some information concerning aircraft installation. It describes the principles of Direction and Position Finding in such a way that the subject may be grasped easily by engineers tackling this field of wireless work for the first time. Numerous photographs and diagrams are included.

Price 21/- net **By post 21/9**

From leading booksellers or direct from the publishers:

ILIFFE & SONS LIMITED,
DORSET HOUSE, TUDOR STREET, LONDON, E.C.4

W.E.2.

605

THE

WIRELESS ENGINEER

AND

EXPERIMENTAL WIRELESS

VOL. IX. NOVEMBER, 1932. No. 110

Editorial.

High Selectivity Tone-corrected Circuits.

TOWARDS the end of 1929 a newspaper article appeared making startling claims for a type of receiver embodying high selectivity in the radio or intermediate stages combined with tone correction in the audio-frequency stages. The results which it was claimed could be obtained by the adoption of this system appeared to be quite inconsistent with the assumption that a modulated wave could be regarded as compounded of a carrier wave and a number of side waves. Even such an eminent authority as Sir Ambrose Fleming wrote a letter to *Nature* discrediting the existence of side bands as physical realities. Many people who made careful tests with sets in which high selectivity and tone correction were employed were convinced, however, that the combination had some advantage, and the question arose whether—apart from the extravagant claims and the doubts thereby engendered as to the validity of the application of the fundamental laws of mathematics to the solution of physical problems—there might not be a possibility that the tone-correcting device restored the audio frequencies which had been cut down by the high selectivity without at the same time restoring—at least, to the same extent—the undesired interference, to eliminate which the high degree of selectivity was employed. We have referred editorially to the subject on several occasions—January and August, 1930; August and December, 1931; and April, 1932—and we have published a number of articles dealing directly or indirectly with the same subject.*

In April, 1931, the Radio Research Board of the Department of Scientific and Industrial Research appointed a committee to examine and report on the properties of very highly selective receivers comprising radio-frequency circuits of exceptionally low decrement combined with audio-frequency tone correction, and the Report of this Committee has just been published by H.M. Stationery Office as Radio Research Special Report No. 12. This Report of 77 pages can be obtained for 1s. 3d. and it will be welcomed by all who are in any way interested in the selectivity of radio-receivers. It is mainly the work of Mr. F. M. Colebrook. Attention has been confined to answering two questions:—(i) Is the performance of such receivers consistent with hitherto accepted theory? (ii) What are the advantages and disadvantages of such receivers in relation to the practical problem of discriminating between wanted and unwanted wireless transmissions?

The results of the very thorough theoretical and experimental investigation can be stated

* Beatty 1928, Butterworth 1929, Colebrook 1931, Moullin 1932.

very simply. It need hardly be said that the results have been found to be in strict accordance with those predicted from the application of the usual side-wave analysis, taking into account, of course, the phenomenon associated with the detector which is usually referred to as the demodulation of a weak signal by a strong one. In highly selective circuits this phenomenon becomes increasingly important due to the enhanced differentiation between the strengths of the wanted and unwanted signals as applied to the detector.

In answering the second question it was found necessary to differentiate between three types of interference, *viz.* : (*a*) intelligible interference on a neighbouring wavelength, or what one might call overhearing ; (*b*) audible heterodyne between the wanted carrier and the carrier or side-waves of the interfering transmission ; (*c*) similar to (*b*) but above the audible frequency limit. We drew attention to the necessity of this distinction in the April editorial, and the Report confirms our conclusion that the combination of high selectivity and tone correction is effective in reducing the first type of interference but not the second. This disposes of the hopes that were entertained in some quarters that the use of receivers of this type would enable the frequency spacing of broadcast transmitters to be greatly reduced. The Report emphasises that the reduction of overhearing is obtained both with linear and square law

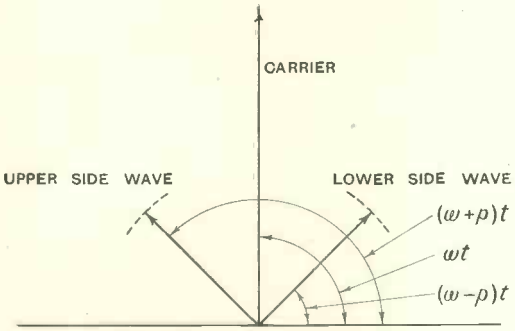

Fig. 1.—*The modulated wave represented by three vectors.*

detection ; this is contrary to the general impression that the former type of detection was essential to the phenomenon. We are not sure that the Report is correct in saying that the advantage remains unimpaired by the subsequent tone correction. We should expect the advantage to be slightly decreased. The third type of interference, *viz.*, heterodyne at a frequency above the limit required in the desired transmission, can always be eliminated by adjusting the cut-off to that limit. The Report deals very fully with the use of a crystal in order to obtain an asymmetry of the resonance curve and shows that such an asymmetry may be utilised to cut out a heterodyne note on one side or other of the wanted carrier, but only by sacrificing quality. As we pointed out in January, 1930, the result would be somewhat like a piano with one or two notes missing.

The theoretical analysis in the Report is developed step by step in a very clear manner, starting from the usual formula for a modulated wave, *viz.*, $e = E\,(1 + M \cos pt) \sin \omega t$. This formula is, however, not quite general, since in actual practice there is no connection between the phase of the carrier and that of the modulation. The formula assumes a very convenient initial phase relation between them which may actually recur now and then, but it will be quite fortuitous. A change in the phase of the carrier does not affect the phase of a singer's voice or of an organ pipe. In other words, when we represent the modulated wave by three vectors, as in Figure 1 (which is reproduced from the Report), it is merely for convenience of mathematical treatment that we assume that the two side-wave vectors pass each other at the exact moment that the carrier vector is horizontal as assumed when $t = 0$ in equations (5) and (6). These equations assume that the carrier wave is passing through zero at the moment when the modulation makes the amplitude a maximum.

There are eight simple ways of representing the modulated wave, *viz.* :—

$$(1 \pm M \sin pt) \sin \omega t \quad \ldots \quad (1)$$
$$(1 \pm M \cos pt) \sin \omega t \quad \ldots \quad (2)$$
$$(1 \pm M \cos pt) \cos \omega t \quad \ldots \quad (3)$$
$$(1 \pm M \sin pt) \cos \omega t \quad \ldots \quad (4)$$

They represent eight different initial assumtions.

With the first equation the side-wave vectors are vertical and opposite to each other when the carrier vector is horizontal ; with the + sign they are moving towards the carrier vector and with the — sign they are moving away from it. With the second

equation with + sign, which is the one adopted in the Report, the side-wave vectors pass the carrier vector when it is horizontal, and with the — sign they pass opposite to it when it is horizontal. With the third equation with + sign the side-wave vectors

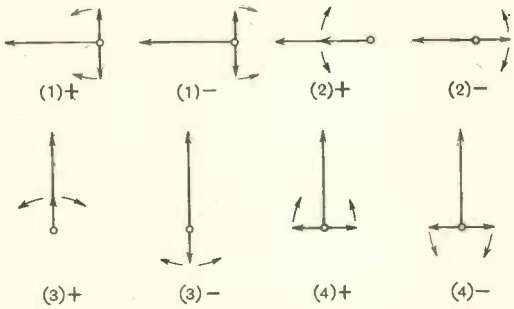

Fig. 2.—*The eight cases where the positions of the vector are shown when $t = 0$.*

pass the carrier vector when it is vertical, and with the — sign they pass opposite to it when it is vertical. With the fourth equation the side-wave vectors are horizontal and opposing each other when the carrier vector is vertical and, as before, are moving towards or away from it according as the + or — sign is taken.

The eight cases are illustrated in the Figure 2, which shows the positions of the vector when $t = 0$. All the vectors are rotating left-handedly, the small arrows merely indicate the movement of the side-wave vectors relatively to the carrier vector.

In practice, the vector diagram will continually change, passing now and then through each of these special cases, and by taking the correct moment to represent $t = 0$ any of these eight equations could be made to represent the modulated wave.

As the Report points out, these phase changes do not affect the phase and magnitude symmetry of the carrier and side-waves.

In the useful bibliography with which the Report concludes we note that Butterworth's paper which was published in this journal in 1929 is given a wrong date, and we suspect that an α near the foot of page 13 should be ω. We notice that the Report refers not to "capacitive" but to "capacitative" circuits. We trust that this is not "indicatative" of any intention of altering the other adjectives of this class, for if "capacitative" why not "inductative," "conductative," "reactative," or even "susceptative"?

G. W. O. H.

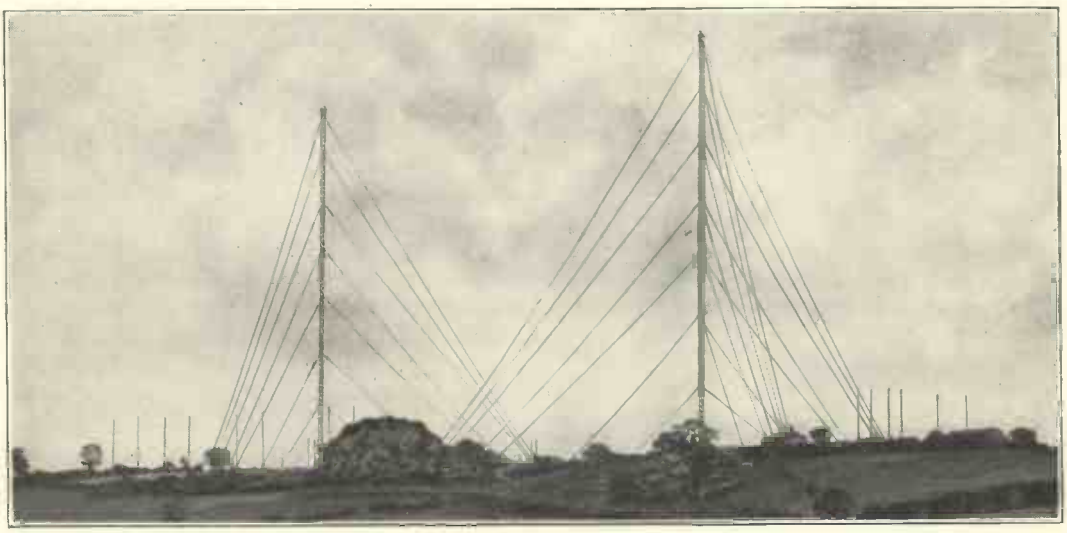

EMPIRE BROADCASTING FROM DAVENTRY.

On or about December 19th the B.B.C. will inaugurate regular Empire transmissions using the system of 80 ft. masts seen beside the 5XX aerial in the photograph. The scheme divides the Empire into five zones, the divisions depending principally upon the time factor and also influenced by considerations of direction and distance.

The Theory of Band-pass Filters for Radio Receivers.*

By C. W. Oatley, M.A., M.Sc.

Introduction.

SINCE the early days of wireless, considerable attention has been paid to the properties of coupled circuits. Thus Howe (*Elec. World*, Vol. 68, p. 369, 1916) has given a simple method for determining the frequencies of free oscillation of such circuits, while more recently Uehling (*Proc.*, Radio Club of America, Nov., 1929), Bligh (*Wireless Engineer*, Vol. 9, p. 61, 1932), and Buffery (*Wireless Engineer*, Vol. 9, p. 504, 1932) have shown how they may be used as band-pass filters in radio receivers. Many of the results derived in Part 1 of the following account have previously been obtained by these writers, but are restated here for the sake of completeness.

The present article may be divided into three parts. In the first of these the theory of the symmetrical two-stage filter is developed and various formulae which may be applied to practical design are derived. In the second part consideration is given to the effects which may arise in actual filters due to lack of symmetry in the two halves of a filter. In particular the effects of faulty ganging are dealt with. Finally, the third part is devoted to an experimental confirmation of the preceding theory.

PART 1.

The Symmetrical Two-stage Filter.

In the band-pass filters commonly used in radio receivers the coupling between the two halves of the filter may be provided by one or more common elements (inductance, capacity or resistance), or by the mutual inductance of two coils, one of which is in each half of the filter, or by a combination of these two methods. The last-named arrangement is illustrated in Fig. 1 (a). Now there is a well-known transformation theorem in alternating current theory which states that the two circuits drawn in Fig. 2 (a) and (b) respectively are equivalent. Hence it follows that the circuits of Fig. 1 (a) and (b) are identical, and thus that all commonly used filters can be represented by the circuit of Fig. 3, where either R or X may be zero.

We will suppose that an E.M.F. E is introduced into the left-hand side of the filter (for example, by coupling L to an aerial coil); then our problem is to find the way in which the voltage developed across the condenser C in the *right-hand* side of the filter varies with frequency. Now for any given setting of the filter we shall only be concerned with frequencies which vary by less than one per cent. from their mean value. It will, therefore, be sufficiently

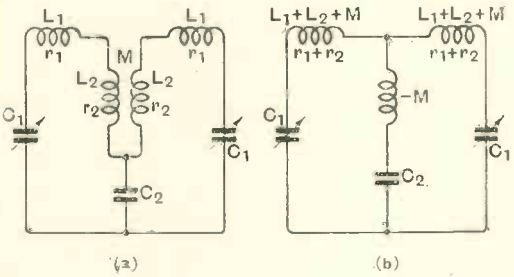

Fig. 1.

accurate to say that the reactance of C is constant, and the problem then develops into one of finding the way in which i_2 varies with frequency.

Suppose the two halves of the filter to be tuned independently (neglecting the common impedance), to the same frequency f_0, so that

$$\omega_0 = 2\pi f_0 = 1/\sqrt{LC} \quad .. \quad (1)$$

Then for any frequency f corresponding to pulsatance ω let

$$\omega = \omega_0 + p \quad .. \quad .. \quad (2)$$

Putting

$$B = L\omega - 1/C\omega \quad .. \quad .. \quad (3)$$

we have

$$B = [L(\omega_0 + p) - 1/C(\omega_0 + p)]$$
$$= [L(\omega_0 + p) - 1/C\omega_0(1 + p/\omega_0)]$$

* MS. received by the Editor, March, 1932.

since p/ω_0 is small,

$$= [(L\omega_0 - 1/C\omega_0) + (Lp + p/C\omega_0^2)]$$

$$= 2Lp \quad \ldots \quad \ldots \quad \ldots \quad \ldots \quad (4)$$

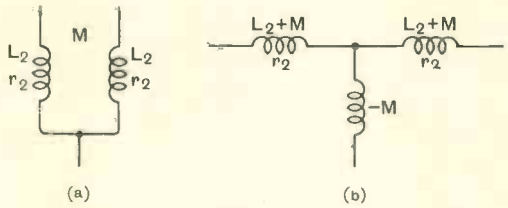

Fig. 2.

Then, with reference to Fig. 3, the circuit equations are :—

$$i_1[(r + R) + j(B + X)] - i_2(R + jX) = E$$

$$i_2[(r + R) + j(B + X)] - i_1(R + jX) = 0$$

Therefore

$$i_1 = \frac{i_2}{(R + jX)}[(R + r) + j(B + X)]$$

$$i_2 = E\left\{\frac{1}{(R + jX)}[(r + R) + j(B + X)]^2 - (R + jX)\right\}^{-1}$$

$$= \frac{E(R + jX)}{[(r + 2R) + j(B + 2X)](r + jB)} \quad \ldots \quad (4a)$$

So that

$$|i_2| = E\left\{\frac{R^2 + X^2}{[(r + 2R)^2 + (B + 2X)^2](r^2 + B^2)}\right\}^{\frac{1}{2}} \quad \ldots \quad \ldots \quad (5)$$

Since the numerator of this expression is independent of B, and therefore of frequency,

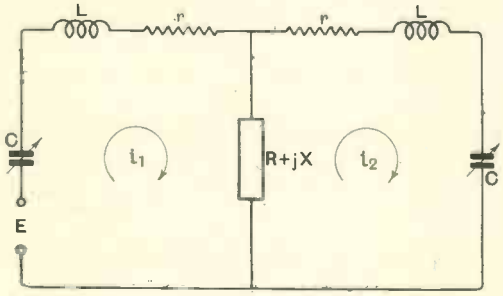

Fig. 3.

we obtain the turning values by differentiating the square of the denominator with respect to B and equating the result to zero. This gives

$$Br^2 + Xr^2 + 2BRr + 2BR^2 + B^3 + 3B^2X + 2BX^2 = 0 \quad \ldots \quad (6)$$

This general equation does not admit of useful solution so we proceed to consider special cases.

Resistance-coupled Filters.

Here $X = 0$ and equation (6) becomes

$$B[B^2 + R^2 + (R + r)^2] = 0$$

There will be only one real solution, *viz.*, $B = 0$, so the resonance curve of the filter will have only one peak. To investigate the matter further we return to equation (5), which may now be written

$$|i_2| = \frac{RE}{\sqrt{(r + 2R)^2 + B^2} \cdot \sqrt{r^2 + B^2}} \quad (7)$$

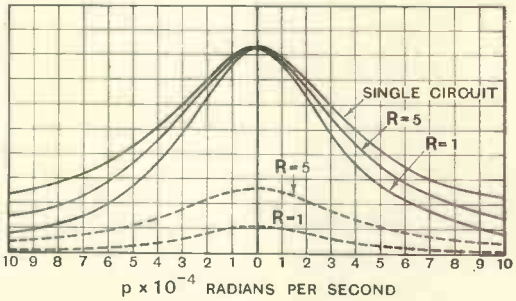

Fig. 4.—$L = 2 \times 10^{-4}$ *henry*, $r = 6$ *ohms*.

The curve represented by (7) is clearly of the same form as would be obtained with two independent simple tuned circuits separated by a valve, the inductances and capacities of the two circuits being identical, and the resistance of one being r and of the other $r + 2R$.

Using equation (7), curves have been plotted for a filter in which $L = 200\,\mu$H., $r = 6$ ohms and $R = 1$ ohm and 5 ohms respectively. These curves are shown in Fig. 4 and the curve for a simple tuned circuit, for which $L = 200\,\mu$H. and $r = 6$ ohms, is also plotted. To make comparison more simple the ordinates are scaled so that all three curves have the same peak value. The actual heights of the curves of the two filters are shown by the dotted curves.

Reactance-coupled Filters.

Here $R = 0$, and

$$Br^2 + Xr^2 + B^3 + 3B^2X + 2BX^2 = 0 \qquad (8)$$

i.e., $(B + X)(B^2 + 2BX + r^2) = 0$

so that $B = -X$

or $B = -X \pm \sqrt{X^2 - r^2}$

The value $B = -X$ obviously corresponds to the central minimum of current and the two other values to the two peaks. Denoting these by B_1 and B_2, we have

$$B_1 - B_2 = 2\sqrt{X^2 - r^2}$$

By substitution of this in (4)

$$2L(p_1 - p_2) = 2\sqrt{X^2 - r^2}$$

Therefore, the frequency separation of the peaks is given by

$$\frac{p_1 - p_2}{2\pi} = \frac{\sqrt{X^2 - r^2}}{2\pi L} \quad .. \quad (9)$$

Now, when $R = 0$,

$$|i_2| = E\left\{\frac{X^2}{[r^2 + (B + 2X)^2](r^2 + B^2)}\right\}^{\frac{1}{2}} \qquad (10)$$

so that if

$$B = -X - \sqrt{X^2 - r^2}$$

$$r^2 + B^2 = 2X(X + \sqrt{X^2 - r^2})$$

and $r^2 + (B + 2X)^2 = 2X(X - \sqrt{X^2 - r^2})$

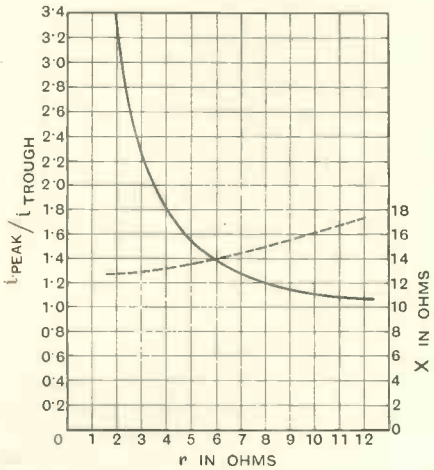

Fig. 5.—*Peak separation* = 10^4 *cycles per second.* $L = 200\mu H$.

Substituting these values in (10), we find

$$|i_2|_{\text{peak}} = \frac{E}{2r} \quad .. \quad .. \quad (11)$$

This value for the peak current is half as great as would be obtained with a simple tuned circuit consisting of half of the filter (neglecting the common reactance).

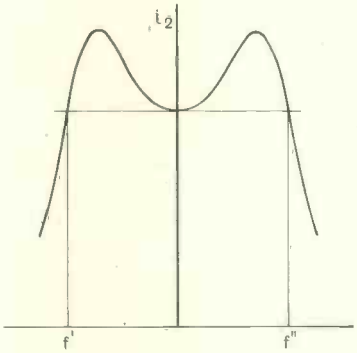

Fig. 6.

Also, when $B = -X$, we have

$$|i_2|_{\text{trough}} = \frac{EX}{r^2 + X^2} \quad .. \quad (12)$$

so that

$$\frac{|i_2|_{\text{peak}}}{|i_2|_{\text{trough}}} = \frac{r^2 + X^2}{2rX} \quad .. \quad (13)$$

This equation suggests that it may be possible to design a filter so that, when it is followed by a simple tuned circuit in a wireless receiver, the trough in the centre of the filter resonance curve just compensates for the peak in the curve of the simple circuit, so that side-band cut-off is eliminated. In this connection a numerical example is instructive. Let it be assumed that the frequency separation of the peaks of the filter resonance curve is to be kept constant at 10,000 cycles per second; then equation (9) gives us one relation between the resistance r of each of the coils and the coupling reactance X. This, together with equation (13), enables us to calculate the ratio of peak current to trough current for various values of r. The results of this calculation are shown graphically in Fig. 5, and in the same figure the dotted curve indicates the corresponding variation of X. The inductance of each coil has been taken to be 200 microhenrys. It is at once apparent that, if the filter is to compensate completely for an even moderately efficient simple tuned circuit which follows it, the coil resistance of the filter will have to be very much lower than has hitherto usually been the case.

In Fig. 6 the calculated resonance curve for a particular reactance-coupled filter has been plotted by the aid of equation (10). It is clear that there are two special frequencies, f' and f'', for which the voltage magnification of the filter is the same as it is for the frequency to which the filter is tuned. In a recent article (*Wireless World*, Jan. 6th, 1932) N. R. Bligh has pointed out that these frequencies are more important in the design of a filter than are the frequencies at which the peaks occur. He has furthermore shown that $(f'' - f')$ is $\sqrt{2}$ times the frequency separation of the peaks. This result follows immediately from equations (10) and (12), for eliminating i_2 we have

$$[B^2 + 2BX + (2r^2 - X^2)][B^2 + 2BX + X^2] = 0$$

Or $\quad B = -X$ or $-X \pm \sqrt{2(X^2 - r^2)}$

Hence $\quad f'' - f' = \dfrac{\sqrt{2(X^2 - r^2)}}{2\pi L}$

$= \sqrt{2}$ (Frequency separation of peaks).

Extension of Previous Results to the Case when $R \neq 0$.

When the two halves of the filter are coupled by an impedance which contains both resistance and reactance the equations become somewhat complicated, but, if the resistance be small compared with the reactance, an approximate solution for the frequency separation of the peaks can be obtained. In this case the turning values of B given by equation (8) will not be greatly in error, so that we may write for the true values,

$$B = B_0(1 + \alpha)$$

where B_0 is a solution of equation (8) and α is a constant which is small compared with unity. Substituting this value in equation (6) and neglecting terms in α^2 and α^3, we obtain

$$[B_0^3 + 3XB_0^2 + B_0(2X^2 + r^2) + Xr^2] + 3\alpha B_0[B_0^2 + 2B_0X + r^2] + \alpha B_0(2Rr + 2R^2 + 2X^2 - 2r^2) + B_0(2R^2 + 2Rr) = 0$$

Of this expression, the first two brackets are equal to zero since B_0 is a solution of (8).

Therefore

$$\alpha = -\frac{R(R + r)}{X^2 + R^2 + Rr - r^2}$$

and

$$B = B_0(1 + \alpha) = B_0 \Big/ \left[1 + \frac{R(R + r)}{X^2 - r^2}\right] \quad .. \quad (14)$$

By hypothesis this equation will be valid so long as α is small compared with unity. If we put $X = 14$ ohms and $r = 6$ ohms, we see that R must not be greater than about 2 ohms. Since in practice R will usually be very much less than this value, we conclude from equation (14) that the presence of a small resistance term in the coupling impedance will not appreciably affect the frequency separation of the peaks.

PART 2.

Effect of Unmatched Circuits.

In the theory outlined above it has been assumed that the two halves of the filter are identical in every respect, and in practice it may not be possible to fulfil this condition exactly. For instance, the tuning condenser of one-half of the filter will normally be connected between grid and filament of a valve, and this latter will introduce into the filter circuit a resistance and a capacity,

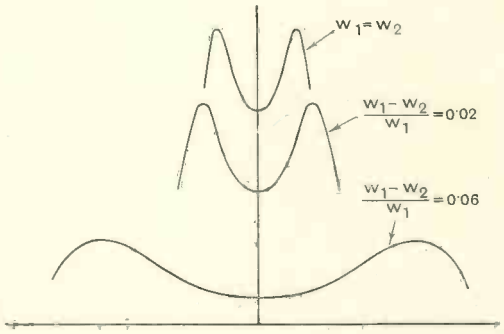

Fig. 7.

both of which will depend in magnitude upon the load in the anode circuit of the valve. Again, even if the two circuits be matched perfectly during the manufacture of a receiver, the capacities of the two tuning condensers will probably vary slightly in the course of time. It therefore becomes of considerable importance to calculate the effects which this asymmetry may introduce into the filter.

We shall consider only filters of the reactance-coupled type. Let the left-hand side of the filter be tuned to a frequency f_1 and the right-hand side to a frequency f_2, so that we may write

$$\omega = \omega_1 + p_1 = \omega_2 + p_2$$

and $$B_1 = 2L_1p_1 \quad B_2 = 2L_2p_2$$

Furthermore, let the resistances of the two sides be r_1 and r_2 respectively. Then from (4*a*) the circuit equations will become

$$i_1[r_1 + j(B_1 + X)] - ji_2X = E$$
$$i_2[r_2 + j(B_2 + X)] - ji_1X = 0$$

so that

$$i_1 = i_2[r_2 + j(B_2 + X)]/jX$$

and

$$i_2 = \frac{jEX}{[r_1r_2 - B_1B_2 - X(B_1 + B_2)] + j[(r_1B_2 + r_2B_1) + X(r_1 + r_2)]} \quad \ldots \quad (15)$$

Two cases are of special interest. In the first place, let us suppose that the two coils are not matched, but that both sides of the filter are tuned to the same frequency, so that

$$\omega_1 = \omega_2 \text{ and } p_1 = p_2$$

Assuming for the moment that $r_1 = r_2$, we may write

$$L_1 = L + \delta L \text{ and } L_2 = L - \delta L$$

so that $B_1 + B_2 = 4Lp = 2B$ (say)

and $$B_1B_2 = 4p^2[L^2 - (\delta L)^2]$$

If the two coils are not greatly different, δL will be small in comparison with L and $(\delta L)^2$ may be neglected in comparison with L^2 so that

$$B_1B_2 = B^2$$

Substituting these values in (15) it becomes apparent that the filter will behave as though the coils were matched and each had inductance L. It is easy to show that this conclusion is not invalidated if the two resistances are not quite the same.

Consider next the case where the two coils are carefully matched, but both sides of the filter are not tuned to exactly the same frequency. Then we may write

$$L_1 = L_2 = L \text{ and } r_1 = r_2 = r \text{ (say)}$$

also $$\omega = \omega_1 + p_1 = \omega_2 + p_2$$

Now let

$$p_1 = p + \phi \quad p_2 = p - \phi$$

so that

$$B_1 + B_2 = 2Lp = 2B$$
$$B_1B_2 = 4L^2(p^2 - \phi^2) = B^2 - 4L^2\phi^2$$

Since we wish to consider cases where ω_1 differs from ω_2 by one or two per cent., it follows that ϕ may be as great as or greater than p. Substituting the above values in (15) we obtain

$$i_2 = \frac{jEX}{[r^2 - 2BX - B^2 + 4L^2\phi^2] + 2rj(B + X)}$$

and

$$|i_2| = \frac{EX}{\{[r^2 + 4L^2\phi^2 - 2BX - B^2]^2 + 4r^2(B + X)^2\}^{\frac{1}{2}}}$$

An examination of this equation leads to the conclusion that the resonance curve for the filter will still be symmetrical about a frequency given by $B = -X$. To obtain further information it is convenient to substitute numerical values. Taking $L = 200$ microhenrys, $r = 6$ ohms, $\omega_1 = 3 \times 10^6$ c.p.s. and $X = 14$ ohms, curves have been calculated for values of ϕ equal to 0, 3×10^4 and 10^5 c.p.s. respectively. The last two of these correspond to differences, in the frequencies to which the two halves of the filter are tuned, of 2 per cent. and 6 per cent. respectively. The curves are plotted in Fig. 7, and, for convenience of comparison, they have been shifted laterally so that the trough of each occurs at the same frequency.

From the above it will be clear that the chief effects to be expected from failure to tune both halves of a filter to the same frequency are :

(*a*) A decrease in the voltage magnification of the filter.

(*b*) An increase in the frequency separation of the peaks.

(*c*) An increase in the ratio of peak current to trough current.

(*d*) The frequency at which the trough occurs will lie midway between the two frequencies to which the two halves of the filter are tuned.

Provided the two halves of the filter are tuned to within about one per cent. of each other, the first three of these effects will probably not be very important, but the fourth may be by no means negligible if, as is usually the case, the filter is to be ganged to one or more other filters or tuned circuits.

In the foregoing analysis it has been assumed that an E.M.F. is introduced into one-half of a filter and a calculation has been made of the current flowing in the other half. We proceed now to consider the effect of introducing two E.M.F's. simultaneously, one in each half of the filter. We shall deal only with the case of a perfectly symmetrical filter coupled by a pure reactance. Referring to Fig. 3, let E_1 be the E.M.F. introduced into the left-hand side of the filter, and E_2 that introduced into the right-hand side. Then, making the necessary changes in the circuit equations (4a) and putting $R = 0$, we find for the current i_2' flowing round the right-hand side of the filter,

$$i_2' = \frac{E_2 r + j\{E_1 X + E_2(B + X)\}}{(r^2 - B^2 - 2BX) + 2rj(B + X)} \qquad (16)$$

An examination of this equation shows us that although either E.M.F. acting alone would give rise to a resonance curve symmetrical about the frequency given by $B = -X$, yet, when both E.M.F's. act simultaneously, the resonance curve is no longer symmetrical. A typical curve plotted from equation (16) for the case where

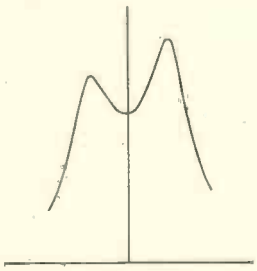

Fig. 8.

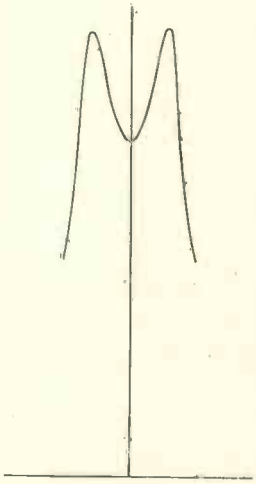

Fig. 9.

$E_2 = E_1/10$ is shown in Fig. 8. If we assume, what is the case when either E.M.F. acts separately, that the peak frequencies are given by

$$B = -X \pm \sqrt{X^2 - r^2}$$

it is easy to show by substitution in (16) that the ratio of the two peak currents is given by

$$\left\{\frac{E_1^2 + E_2^2 + 2E_1E_2\sqrt{1 - r^2/X^2}}{E_1^2 + E_2^2 - 2E_1E_2\sqrt{1 - r^2/X^2}}\right\}^{\frac{1}{2}} \quad .. \quad (17)$$

Then if, as is usually the case, r^2/X^2 is small compared with unity, this ratio will be very approximately equal to

$$(E_1 + E_2)/(E_1 - E_2)$$

It is clear that unless proper precautions be taken to ensure that an E.M.F. is introduced into one side of the filter only, a markedly asymmetrical resonance curve may result.

PART 3.

Experimental Confirmation.

The object of the experiments was to discover whether the theory outlined above is adequate to explain the results obtained with practical filters. For this purpose it was not considered necessary to obtain an exact quantitative verification of each of the equations in Part 2, but rather to determine whether the general form of the experimental curves was in agreement with the theory.

The coils of the filter had each an inductance of about 200 microhenrys and were wound on paxolin tubes 1½in. in diameter and fixed axially in cylindrical brass screening boxes about 4in. in diameter and 4in. long. One end of each of the screening boxes was left open so that an E.M.F. could be induced into either coil at will. The tuning condensers were of the usual type with screening boxes, and these boxes, as well as those containing the coils, were earthed. A vernier condenser was placed in parallel with one of the main condensers, and the oscillator wavemeter was likewise provided with a vernier adjustment. The filter coupling reactance was a fixed capacity which, at the frequency used in all the experiments (about 500 kilocycles per second), had a reactance of about 20 ohms. The resistance of each coil, determined by the resistance variation method, was found to be about 8.5 ohms. Two thermionic voltmeters were constructed to be as nearly as possible alike, and one was connected across each of the coils of the filter. Any load introduced by the voltmeter was thus constant and sensibly the same for each coil.

Initially, the two coils were unmatched, and on measurement were found to differ in inductance by about 10 per cent. The two halves of the filter were separately tuned to the same frequency and an E.M.F. was induced in one half only. The resulting resonance curve is shown in Fig. 9, and con-

firms the previous deduction that a symmetrical curve may be obtained with unmatched coils provided the circuits be correctly tuned. The two coils were now matched and the circuits retuned, and thus curve (*a*) of Fig. 10 was obtained. Curve (*b*) of the same figure shows the result of distuning one of the circuits by two or three per cent., and curve (*c*) the result of distuning the same circuit by a slightly greater amount in the opposite direction. These curves should be compared with the similar theoretical ones in Fig. 7, and it is to be observed that in each case the curves have been shifted laterally so as to be symmetrical about the same frequency. Actually, of course, they would be displaced relatively to each other by an amount depending on the magnitude of the distuning of the filter circuits.

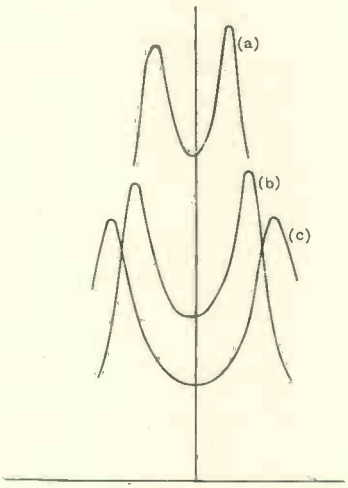

Fig. 10.

For the final experiment the coils of the filter were placed in such a position that the oscillator induced E.M.F's. into both of them simultaneously. By removing the filter coupling reactance and separating the two tuned circuits, these two E.M.F.'s

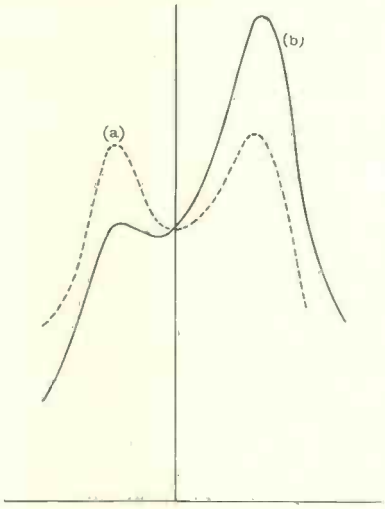

Fig. 11.

were measured and one was found to be 3.2 times as large as the other. The coupling reactance was then replaced and a thick brass plate was placed across the opening of the screening box containing the coil into which the smaller E.M.F. was being induced. As a result this E.M.F. was reduced to zero, and the symmetrical resonance curve marked (*a*) in Fig. 11 was obtained. The brass plate was then removed, and, without any other alteration, curve (*b*) of the same figure was obtained. The ratio of the squares of the peak currents in this curve is seen to be 3.12. By substitution of the appropriate measured values in equation (17) we find, for the calculated ratio of the squares of the two peak currents, the value 3.4. It thus appears that there is good agreement between theory and experiment on all points.

A Note on Impedance Measurement.*

By A. T. Starr, M.A., B.Sc.

(*Faraday House.*)

Introduction.

THE first object of this note is to describe an American arrangement for measuring impedance which deserves wider recognition and use than it receives.

The second object is to explain the use of inductive ratio arms in the Wheatstone bridge. An important error, which occurs in the only published account, is here corrected.

An American Impedance Measuring Set.

Fig. 1a shows the American arrangement for measuring impedances. It is compact and quick to operate. *AB*, *DE*, *FG*, constitute a three-winding transformer or "hybrid coil." *DE* and *FG* have an equal number of turns and are symmetrically wound with respect to *AB*, which may have any convenient number of turns. The standard resistance *R* and condenser *C* are varied until there is no current in the detector, which may be telephones or a vibration galvanometer or a heterodyne detector, according to the frequency employed. When a balance is obtained, the impedance is equal to the resistance *R* in series with the condenser *C*, and so the real and reactive parts of the impedance are *R* and $-1/(2\pi fC)$, where *f* is the frequency of the test. It is therefore necessary to know the frequency of the test to the accuracy required in the impedance measurement. If the impedance has an inductive reactance, the condenser *C* is switched over to the other arm, as shown in Fig. 1b, and then the impedance has a real part *R* and a reactive part $1/(2\pi fC)$.

The explanation of this method is very simple and is as follows. The oscillator produces a current along *AB*, say, and this induces equal e.m.f's along *DE* and *FG*. When *R* and *C* in series are equivalent to *Z*, as in Fig. 1a, or *R* is equivalent to *C* and *Z* in series, as in Fig. 1b, these e.m.f's produce equal circulating currents round the circuits *DEHJD* and *FGJHF*. These circulating currents oppose one another in *JH*, the primary of the transformer connecting to the detector and the result is a balance. This method requires an accurately wound three-winding transformer (*DE* and *FG* are wound with twisted pair), a variable resistance and condenser, and a source of known frequency.

Inductive Ratio Arms in the Wheatstone Bridge.

Figs. 2a and 2b show how the better known Wheatstone bridge arrangement is employed for the measurement of impedance. When a balance is obtained, the real and reactive parts of *Z* are again *R* and $\mp 1/(2\pi fC)$. R_1, R_1 may be any suitable and equal resistances or even reactances. It would be equally good to use a pair of equal condensers in place of R_1. At very high frequencies a pair of ganged condensers would be very suitable.

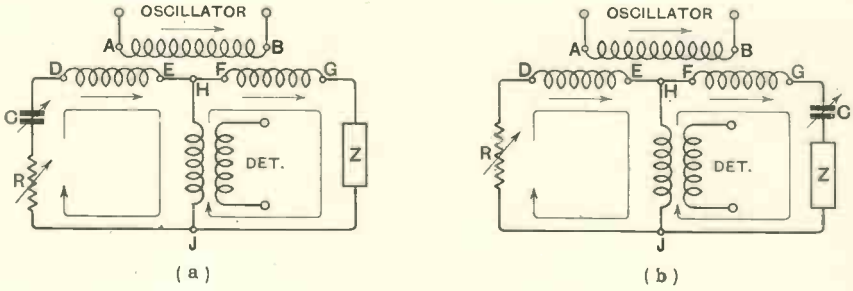

Fig. 1.

* MS. received by the Editor, Feb., 1932.

It was suggested by Mr. A. D. Blumlein (late of the International Telephone and Telegraph Laboratories) that much closer balance between the ratio arms can be obtained if the resistances R_1 are replaced by balanced coils, wound with twisted pair, shown symbolically in Fig. 3a. In this figure I have shown the coils wound so as to be series aiding in the direction *ABC*. For the purpose of obtaining well-balanced, equal-ratio arms, the coils could be wound so as to be series opposing along *ABC*, as shown in Fig. 3b. This latter direction is that shown in the published description of the method by R. Walsh, *Philosophical Magazine*, of July, 1930.

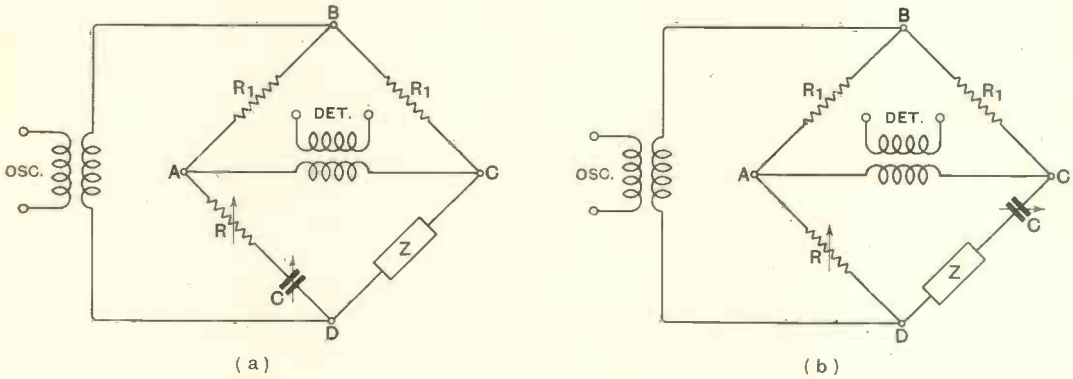

Fig. 2.

There is an important advantage to be obtained by the winding arrangement of Fig. 3a, which is erroneously claimed by Mr. Walsh for the winding arrangement of Fig. 3b.

Let us assume that the resistances of the coils are small compared with the reactances of the self and mutual inductances of the windings and that they may be neglected. The reactances may be of the order of a thousand ohms and the resistances only ten.

When a balance is obtained, equal currents flow along *BA* and along *BC*, so that *A* and *C* are at the same potential. If the coils are wound series aiding along *ABC* and the coupling is perfect, which will be almost the case if *AB* and *BC* are wound with twisted pair, it can be seen that *B* is at the same potential as *A* and *C*. For if i is the current along *BA* and *BC* and the self and mutual inductances are each equal to L, the potential drop along *BA* is $jwLi$ (due to the self inductance of *BA*) *minus* $jwLi$ (due to the mutual inductance from *BC*), so that *A*, *B*, and *C* are all at the same potential. The divergence in practice from this condition is due to the small voltage drop along the small resistances of *BA* and *BC*, so that *B* will be at a slightly higher potential than *A* and *C*. *B*, which is connected to a terminal of the oscillator or the supply transformer, may be earthed without causing much head effect in the phones.

The property that *A*, *B*, and *C* are at the same potential can be used with benefit in measuring the sheath capacities of cables. (See J. Collard, *Electrician*, Feb. 27, 1931.)

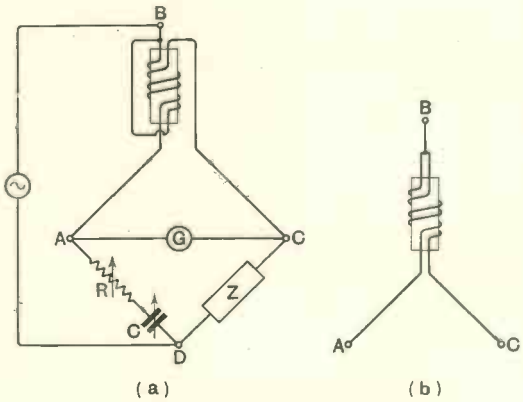

Fig. 3.

Suppose it is desired to measure the difference in capacity between the sheath and two wires, w_1 and w_2, of a cable. The method is shown in Fig. 4. w_1 is connected to *A*,

w_2 to C, the remaining wires of the cable to B, and the sheath to D, which is earthed. The arms AD and CD are composed of a differential condenser. When a balance is obtained, A, B, and C are all at the same potential, so that all the wire-to-wire capacities have no effect on the balance, whilst the sheath capacities of the wires, excepting w_1 and w_2, are placed across BD, so that they, too, do not affect the balance. The unbalance capacity to the sheath of w_1 and w_2 is thus measured.

Another advantage is that, if a generator of given e.m.f. is used, the bridge of Fig. 3a gives a greater sensitivity than that of Fig. 2a. For in the former bridge in the balanced condition the impedance presented to the generator by the bridge is $\frac{1}{2}Z$, whilst in the latter case the impedance is $\frac{1}{2}(R_1 + Z)$.

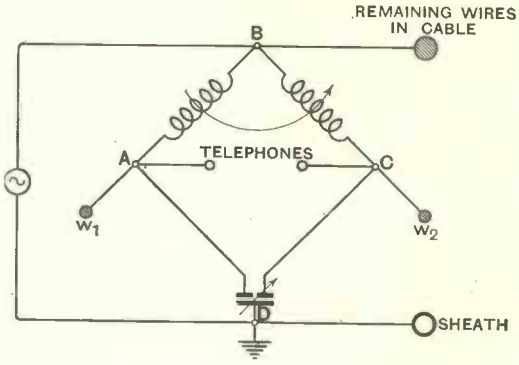

Fig. 4.

The former thus takes more current from the generator and it is seen that the sensitivity is increased.

NEW BOOKS.

Handbuch der Bildtelegraphie und des Fernsehens (Picture Transmission and Television). Edited by F. Schröter. Pp. XVI + 487, with 365 Figs. Springer, Berlin. 58 marks.

This comprehensive and masterly treatise has been written by a number of experts, each dealing with his own special branch of the subject. The Editor is a Professor at the Charlottenburg Hochschule and also Director of the Research Department of the Telefunken Company, and he has had the close co-operation of Prof. Karolus and the staff of his Leipzig laboratory in the preparation of this book.

On turning over the pages one is impressed by the enormous amount of work which has been done in this branch during the last seven years, for only brief references are made to earlier work unless it was of a fundamental character and formed a step towards modern developments. Although the book deals to a large extent with the methods and processes developed by Karolus, Siemens and Halske, and the Telefunken Company, the work of other companies is described very fully, and special reference is made in the preface to the German Post Office, the Radio Corporation of America and the Marconi Company. The first three of the eleven chapters are by Schröter and deal with scanning in both picture transmission and television; 147 pages are devoted to this subject. Successive chapters deal with photoelectric cells, picture reproduction and light modulation, synchronisation, amplification, wireless picture transmission and reception, line picture transmission, the construction and operation of picture transmission and television apparatus.

A valuable feature of the book is the detailed references given at the foot of nearly every page to articles and patent specifications. The diagrams, illustrations, printing and binding are all of the excellent quality which one has come to associate with the name of Springer. We cannot speak too highly of the book; its publication marks an epoch in the development of the subject, and although the price sounds rather excessive we feel sure that it would be money well spent by anyone seriously interested in picture transmission or television.

G. W. O. H.

A Theoretical and Experimental Investigation of High-selectivity Tone-corrected Receiving Circuits.

(Special Report No. 12, of the Radio Research Board.)

Part I comprises the general theory of the subject; Part II, confirmation of the theory by a set of experiments on tuned coil retroactive circuits; Part III, the application of quartz crystals to selective reception; Summary and Conclusion, and Bibliography. Pp. 69 + viii, with 22 diagrams. Published by H.M. Stationery Office. Price 1s. 3d.

Wireless and Shipping, A Record of Progress.

A short history of the growth of wireless and its use on board ship from Marconi's early experiments up to the present time, and including articles by Marchese Marconi, Sir Archibald Hurd, Mr. E. H. Shaughnessy, Dr. S. H. Long, and other authoritative writers. Pp. 87+iv, with numerous illustrations. Published by the *Shipping World*, Ltd. London. Price 2s.

Books on All Technical Subjects and Applied Science.

A catalogue of new and second-hand books on over 450 subjects, including 89 on wireless telegraphy and telephony, many of the books listed being rare or out of print. Revised to July, 1932, and issued by W. & G. Foyle, Ltd., 119–125, Charing Cross Road, London, W.C.2.

The Screen-grid Valve as Frequency-changer in the Super-Het.*

By E. L. C. White, B.A.

IN *The Wireless World* of 6th May, 1931,[1] there was published a description of a new method of mixing the local oscillation in a super-het receiver with the signal, to produce the beat or "intermediate" frequency. The new method is to feed the local oscillation into the anode circuit (instead of, as usual, into the grid circuit) of the first detector, or "frequency-changer" (Fig. 1). If, now, this valve is a screen-grid valve, its grid circuit is kept entirely free from the local oscillation, from which follow two very important advantages :—(*a*) there is no interaction whatever between the tuning of the grid circuit and of the local oscillator, and (*b*) the aerial can be connected directly to the grid circuit, as there will be no radiation from it. This saves having a stage of H.F. amplification at the signal frequency.

action of the screen-grid valve used in this way as a frequency-changer is, however, by no means obvious, and it is of considerable interest to look into this question. Besides the natural desire to have a sound theoretical explanation of every experimental phenomenon, there is the very practical reason that a knowledge of the theory will show what are the optimum conditions for most efficient working.

To make the difficulty clear, consider first the new scheme as applied to a triode (Fig. 1*b*). The amplification factor μ of a triode is practically constant, even in regions where the characteristics are strongly curved. Thus a potential V on the anode has exactly the same effect as $\frac{V}{\mu}$ on the grid, so that if the valve is biased to the bottom bend of its

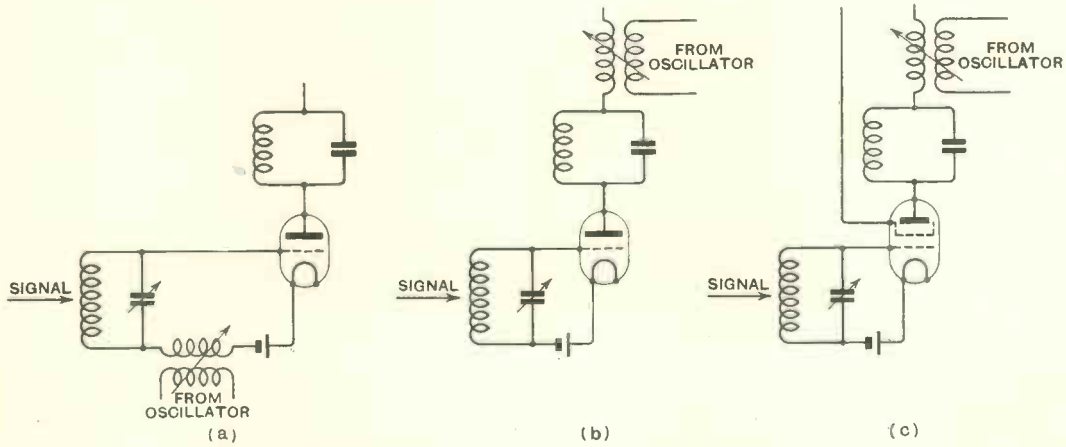

Fig. 1.—*Circuit of frequency-changer.* (a) *Old circuit,* (b) *new circuit with triode,* (c) *new circuit with screen-grid valve.*

In practice, this scheme works extremely well, and has been incorporated in four *Wireless World* designs.[2] The theory of the anode characteristic, we shall get ordinary anode bend rectification, with consequent production of the beat frequency between the signal and the local oscillation. But in the case of a screen-grid valve, μ does not remain even approximately constant over any portion of the characteristics, so the above simple reasoning does not apply, and we have to look for some other explanation.

* MS. received by the Editor, March, 1932.

[1] "Frequency Changers," by W. T. Cocking.

[2] "Superselective Six," June 3rd; "Superselective Five," July 15th; "D.C. Superselective Five," Aug. 12th; and "Single Dial Superheterodyne," Dec. 9th, 1931.

Suppose we had a valve whose characteristics, both anode current–anode volts and anode current–grid volts, were perfectly straight, but divergent (Fig. 2). If we applied both signal and local oscillation to the grid, or both to the anode, we should get no rectification, because this depends on curvature of the characteristics. But if we apply one to the anode and the other to the grid, we do get the beat frequency produced, though the action can scarcely be called "rectification." The mode of operation can be seen from Fig. 2*a*. Suppose *P* is the normal operating point of the valve, at anode volts *OQ* and grid bias — 1.5 volts. An oscillating potential on the anode, from the local oscillator, swings the anode potential between *A* and *B*, and the operating point from *C* to *D*. Now apply to the grid a signal of (say) 1.5 volts peak, and slightly different frequency. This is the same as a signal of the same frequency as the oscillator, but with the relative phases changing slowly. When the two are in phase, the grid will be most positive (*i.e.*, zero) when the anode potential is at *B*, so the operating point will be *F*. It can be seen, in fact, that it will oscillate along a path *FPE*, and as *FD* is greater than *CE*, owing to the divergence, the mean anode current will increase. Similarly, when the two are 180° out of phase, the path followed will be *GPH*, and the mean anode current will decrease. This increase and decrease of the mean anode current occurs at the difference of frequency between the two signals, and is the beat frequency we require, to pass on to the I.F. amplifier.

It can be seen from the above explanation that it will not matter if the characteristics are curved, so long as they are roughly of the same shape; what is important is that *FD* and *DH* shall be greater than *GC* and *CE*, or in other words, that there shall be an increase in mutual conductance *g* from *A* to *B*, of as great an amount as possible.

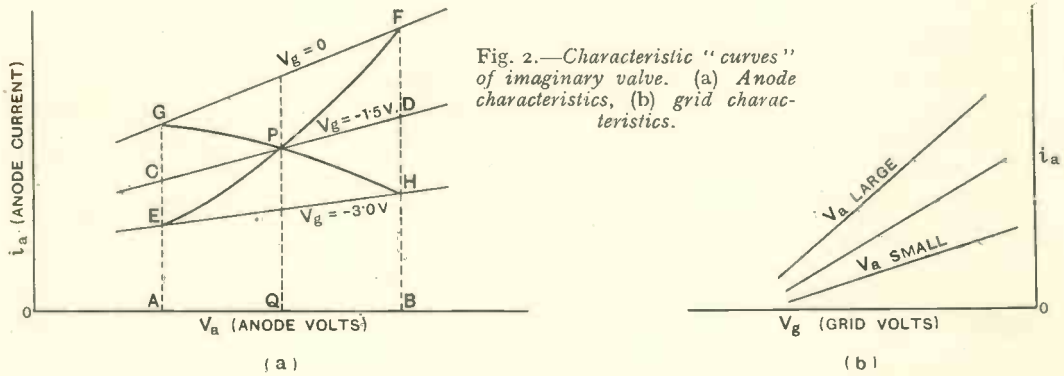

(a) (b)

Fig. 2.—*Characteristic "curves" of imaginary valve.* (a) *Anode characteristics,* (b) *grid characteristics.*

Looking at the characteristics of an actual screen-grid valve (Mazda 215 S.G.) in Fig. 3, we see that *g* is a minimum (*A*, Fig. 3) at an anode potential V_a about 10 volts below the screen potential V_s, and is much larger, and fairly constant, at anode potentials more than about 10 volts above V_s (*B*, Fig. 3). For a variation of a few volts round about $V_a = V_s$, the characteristics approximate to the ideal diverging straight lines discussed above, as shown on an enlarged scale in

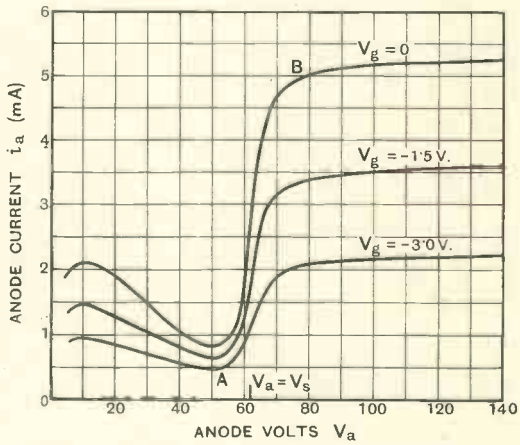

Fig. 3.—*Measured static characteristics of Mazda 215 S.G. Taken at $V_s = 62$ volts.*

Fig. 4. For this region, we can express the anode current i_a as $i_a = \frac{1}{i_0}(i_0 + av_a)(i_0 + gv_g)$,

where i_0 is the value of i_a at the normal operating point (*e.g.*, $V_a = V_s$, and $V_g = -1.5$ volts), g is the mutual conductance and a the anode conductance at

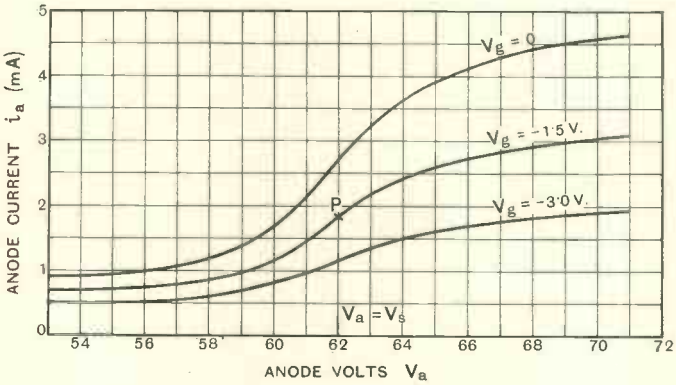

Fig. 4.—*Portion of Fig. 3 with enlarged scale for V_a. $V_s = 62$ volts.*

this point, and v_a and v_g are the *changes* of V_a and V_g from this point. From this simple formula, as shown in the Appendix, we can calculate the amplitude of the beat-frequency current produced by known amplitudes of signal and local oscillation. This is easily tested by experiment, which will show whether the theory is reasonable or not.

Experimental Test of the Theory.

The ordinary static characteristics of Fig. 4 were determined carefully for a Mazda 215 S.G., and from them the various constants in the above formula for i_a were found. From these and the theory in the Appendix the amplitude δi_a of the beat-frequency current was calculated for a constant amplitude of the signal v_{g0} of 1.4 volts and various values of the amplitude v_{a0} of the local oscillation.

To find δi_a experimentally, the circuit in Fig. 5 was used. The batteries V_a, V_s, and V_g supplied the steady potentials, which for this purpose were 62, 62, and -1.5 volts respectively, and the "signal" v_{g0} and "local oscillation" v_{a0} were supplied from the A.C. mains. v_{g0} could be reversed by the switch S, so that v_{g0} and v_{a0} could be in phase or in opposite phase, and v_{a0} was varied by the potentiometer P and measured by the A.C. voltmeter M. The change of i_a, measured by the milliameter mA., on reversing the switch S is twice the amplitude δi_a of the beat-frequency current that would be produced if v_{g0} was really changing phase slowly with respect to v_{a0}. The calculated and experimental results are compared in Table I.

TABLE I.

$V_a = V_s = 62$ volts. $V_g = -1.5$ volts.
$v_{g0} = 1.4$ volts.

Anode Swing v_{a0} (Volts).	I.F. Current δi_a produced (mA).	
	Calculated.	Experimental.
0.71	0.056	0.075
1.41	0.107	0.140
2.83	0.189	0.225
7.07	0.263	0.335

The difference between theory and experiment is, on the average, about 25 per cent., so the agreement is not very good, but it can be taken as substantiating the theory in the main, as the ratio between the two values is fairly constant, and this suggests some systematic error, such as might occur through assuming the simple formula for i_a to hold for such a large value of v_{g0}.

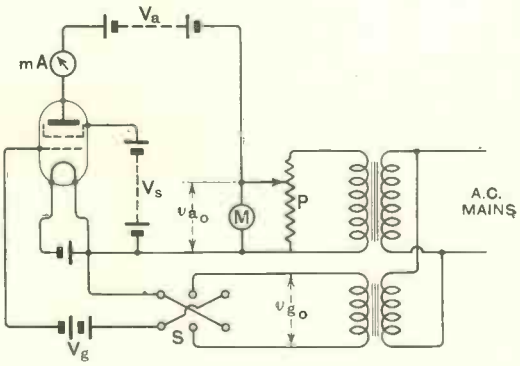

Fig. 5.—*Apparatus used in the experiments.*

It is not necessary to work with $V_a = V_s$. V_a can have its normal value of 120 volts or so, while V_s is 60 or 70. But in this case, in order to get any reasonable efficiency, v_{a0} must be large enough to swing the anode volts below V_s, otherwise there will be little change of g over the range covered. This is shown in Fig. 6, taken with the apparatus

of Fig. 5. The curves show the variation in output δi_a as v_{a0} is increased, for constant values of V_s (62 volts) and v_{g0} (1.4 volts), and various values of V_a. In all cases it is seen that maximum output is obtained when v_{a0} is such that the anode potential swings

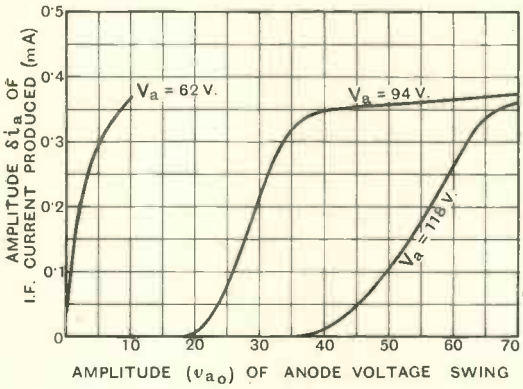

Fig. 6.—*Variation in I.F. current produced with anode swing applied to valve.* $V_s = 62$ *volts;* $V_g = -1.5$ *volts;* $v_{g0} = 1.4$ *volts.*

down as far as A (Fig. 3), *i.e.*, to about 10 volts below V_s.

Perhaps the most important result of the theory is that the best value of grid bias V_g is 0, or just sufficiently negative to avoid grid current, and not, as previously supposed, such as to bring the operating point to the bottom bend of the grid volts–anode current characteristic. This is borne out by Fig. 7, which represents experimental curves similar to those in Fig. 6, but for various values of V_g, V_a being fixed.

In actual practice it is inconvenient to work the valve at $V_a = V_s$, which Fig. 6 shows to be the condition requiring the smallest value of v_{a0} (about 10–15 volts) for maximum sensitivity, because the impedance of the valve is very low in this region, about 3,000 ohms only (*see* Fig. 4), and this acts as a heavy load on the oscillator. If a higher value of V_a is used, this load is only applied during a portion of the cycle, and so has less effect.

Appendix.

From the characteristic of the valve (Fig. 3) we can see that to quite a close approximation $i_a = A \,.\, f(v_g) \,.\, f(v_a)$. If we take as the normal operating point $V_a = V_s$, $V_g = -1.5$ volts (P, Fig. 4) then for v_g up to about 1 volt it is sufficient to take $f(v_g) = (i_0 + gv_g)$. For v_a up to 2 volts, we could take $f(v_a) = (i_0 + av_a)$, giving the simple expression $i_a = \frac{1}{i_0}(i_0 + gv_g)(i_0 + av_a)$ mentioned previously, but to fit the curves up to about $v_a = 7$ volts, we must take more terms in the expansion of $f(v_a)$. The curves are practically symmetrical about P, so we take $f(v_a) = (i_0 + av_a + bv_a^3 + cv_a^5)$.

Then

$$i_a = \frac{1}{i_0}(i_0 + gv_g)(i_0 + av_a + bv_a^3 + cv_a^5)$$

Putting in this expression the signal

$$v_g = v_{g0} \cos pt$$

and the local oscillation $v_a = v_{a0} \cos p't$, we

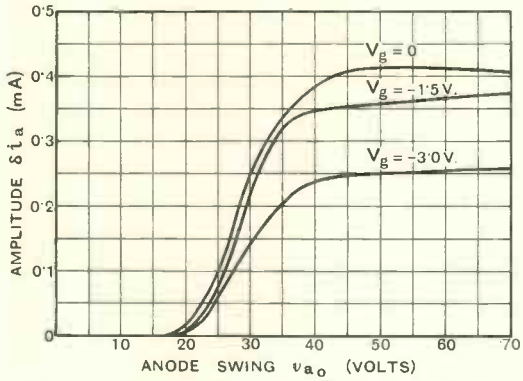

Fig. 7.—*Effect of grid bias* V_g *on output of I.F. current* δi_a. $V_s = 62$ *volts;* $V_a = 94$ *volts;* $v_{g0} = 1.4$ *volts.*

find the resulting term of frequency $\frac{p - p'}{2\pi}$ gives

$$\delta i_a = \frac{gv_{g0}}{2i_0}\left(av_{a0} + \tfrac{3}{4}bv_{a0}^3 + \tfrac{5}{8}cv_{a0}^5\right)$$

from which the calculated values in Table I are derived.

A New Type of Directive Aerial.*

By T. Walmsley, M.Inst.C.E., B.Sc..

THE purpose of this article is to describe a type of directive aerial possessing several novel features.

In the first place there is no separate reflector curtain, reflector action being obtained without recourse to the usual inductive excitation of the reflector wires, or the coil and condenser phasing devices introduced to produce the necessary phase difference between the two array curtains. Secondly, radiating elements of various lengths are used in conjunction with each other. Thirdly, the non-radiating termination inserted at the end of the feeders in some types of receiving array for the purpose of matching the surge impedance of the array, is replaced by a radiating element thus increasing the radiation efficiency of the system.

A better appreciation of the principles involved in the aerial about to be described will probably be gained from an account of some of the limitations imposed in the design of arrays. In that type of array

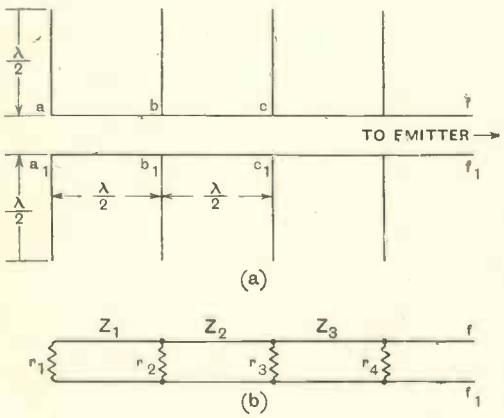

Fig. 1.—*End on array.*

consisting of pairs of half wave radiators branching from a two wire open feeder having a surge impedance of about 560 Ω, there is no attempt at matching the junction of the feeder and each pair of radiators. For example, in Fig. 1a showing an "end on" type of array the resistance due to the half wave radiators at the points aa_1, bb_1, cc_1, is extremely high whilst the surge impedance of the feeder fa, f_1a_1 is comparatively low. In consequence large reflections are set up in the feeder.

The condition necessary to ensure that correct matching is obtained will be understood by referring to Fig. 1b, in which the radiators of Fig. 1a are imagined to have pure resistances equal to r_1, r_2, r_3 spaced half a wavelength apart and the surge impedance of the various sections of the feeder are represented by Z_1, Z_2, Z_3.

The condition for correct matching is that $Z_1 = r_1$

$$Z_2 = \frac{r_1 r_2}{r_1 r_2}; \quad Z_3 = \frac{r_1 r_2 r_3}{r_1 r_2 + r_2 r_3 + r_3 r_1}$$

Furthermore

$$Z_1 > Z_2 > Z_3.$$

If $r_1 = r_2 = r_3$ which is approximately true when the radiators are equal in length it follows that the condition for correct matching is that

$$Z_1 = r_1; \quad Z_2 = \frac{r_1}{2}; \quad Z_3 = \frac{r_3}{3}$$

Now the value r_1, of the two half wave radiators connected at aa_1, Fig. 1a, is about 6000 Ω and to obtain a value of surge impedance equal to this figure is impossible of attainment. On the other hand, if instead of half wave radiators, pairs of quarter wave radiators were connected at the points aa_1, bb_1, cc_1 the value of r_1 would be approximately 100 Ω and, for correct matching, Z_3 would have to be 33 Ω, a value inconveniently low. It is thus obvious that the radiators in the type of array considered, whether composed of half wave or quarter wave elements, separated by distances equal to half a wavelength cannot be easily matched by a correct choice of feeders. Inductances and condensers might be used but such an expedient does not offer a practical solution of the problem.

If, however, it were possible to have

* MS. received by the Editor, April, 1932.

radiators varying in resistance, the end radiators at aa_1 being the smallest and $r_3 > r_2 > r_1$ a balanced arrangement throughout the line would be possible. Consider for example an arrangement similar to that shown in Fig. 2 with the modification that the spacing is half a wavelength instead of

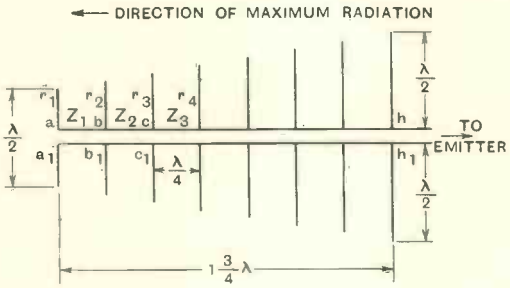

Fig. 2.—*Coast station type array.*

a quarter wavelength as there shown. The radiators increase in length in regular progression, those at aa_1 being each one quarter of a wave long. Such a variation can be obtained by varying the length of wires. Some idea of the relationship between resistance and length of radiators can be obtained from the curve of Fig. 3, which gives the results of tests made on vertical radiators fed at their centre by a two wire transmission line. The resistance was calculated by measuring the power input into the radiators and dividing by the square of the current in the transmission line at the nearest position to the radiators where the rate of change of current was zero. The wire used for the radiators was copper No. 14 S.W.G. and the middle of the dual radiator was maintained at the height of threequarters of a wavelength above the earth. It should be emphasised that the values given in the curve are not the impedances of the radiators as presented to the extreme end of the transmission line but a true resistance measured across the transmission line at varying distances from the radiators although never more than a fraction of a wavelength away from them. When each of the radiators is either one quarter or one half a wave long this distance is zero and the impedance of the radiators is purely resistive.

For intermediate lengths of radiator, the impedance has reactive components. It is also necessary to remember that the values shown in the curve relate to wires far removed from other wires. Actually in an array, the radiators affect each other, altering their resistance values. The curve, however, has been found in practice to provide a useful guide. Taking the values as shown, and assuming for a moment that all the impedances are pure resistances and that perfect matching all along the twin feeder is obtained, the total resistance of the aerial at hh_1 will be 75 Ω approximately. It would be quite possible to feed an array having this low impedance, but if the ordinary inexpensive two wire transmission line having a surge impedance of about 560 Ω were used as a link between array and transmitter 75 Ω would be rather low for efficient matching. Another and greater disadvantage of this arrangement is that the surge impedance of the feeder between adjacent radiators must increase progressively from hh_1 to aa_1, Fig. 2, whilst the impedance of the radiators connected across the feeder wires decreases rapidly. In consequence the energy supplied to the high impedance radiators at hh_1 would be only a

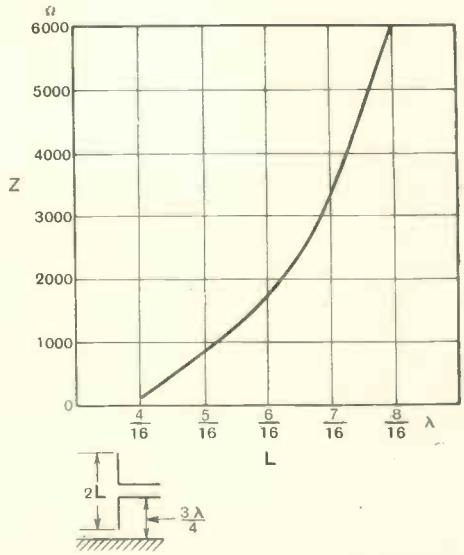

Fig. 3.—*Impedance of vertical radiators measured at their centres. Height of feeding point above ground.*

small fraction of the energy applied to the low impedance radiators at aa_1. To remedy this defect the radiators in the final arrangement have been spaced one quarter of a

wavelength apart instead of one half a wavelength postulated in the foregoing discussion, and the surge impedance of the feeder has been increased progressively from aa_1 to hh_1 by increasing the ratio of the spacing between the two limbs of the feeder to the cross sectional area of the limbs. Small reflections are thus present in the feeder, but the match at the connection to the transmission line at hh_1 is almost perfect. This result is rendered possible owing to the fact that when reflections occur along a feeder line, the equivalent impedance at quarter wave intervals along the line alternates between maximum and minimum values, and where these values occur, the impedance is purely resistive.

Furthermore, in the case of the section of a feeder having negligible energy losses, the product of maximum and minimum equivalent impedance at quarter wave intervals is equal to the square of the surge impedance of the feeder. Thus in general if Z_0 is the surge impedance of the feeder, Z_l, Z_m, the equivalent impedances at points spaced a quarter of a wavelength apart where the maximum and minimum current values occur

$$Z_0^2 = Z_l \,.\, Z_m \text{ or } Z_m = \frac{Z_0^2}{Z_l}$$

At a point quarter of a wavelength away from the position where the equivalent impedance is Z_m, the current will again attain a maximum value, and the equivalent impedance will be equal to

$$\frac{Z_0^2}{Z_m} = \frac{Z_l Z_m}{Z_m} = Z_l$$

For an explanation of this and other properties of transmission lines an article by Nancarrow* and a paper by the author† are given as references. Now if the feeder is terminated in a pure resistance r_l it can be shown that at distances a multiple of a half wave from the termination, the equivalent resistance of the feeder $= r_l$ and at odd multiples of a quarter of a wavelength the equivalent resistance of the feeder is $\frac{Z_0^2}{r_l}$.

* F. E. Nancarrow "The Behaviour of a Transmission Line at Radio Frequencies." *The Post Office Electrical Engineers' Journal*, 1928, Vol. 21, page 165.

† T. Walmsley, "Beam Arrays and Transmission Lines," *Proc. Inst. Electrical Engnrs.*, Vol. 69, No. 410.

Thus in the particular case under consideration to which Fig. 2 refers, if r_1 is the resistance value of the end radiator, Z_1 the surge impedance value of the feeder between aa_1 and bb_1, and R_1 the equivalent impedance value across the line immediately to the left of bb_1

$$R_1^1 = \frac{Z_1^2}{r_1}$$

If the line were uniform between aa_1 and cc_1 and no other radiators were connected across it, the equivalent resistance across the points cc_1 would be

$$\frac{Z_1^2}{R_1^1} = r_1$$

If, however, radiating elements having a resistance r_2 were connected across bb_1 the equivalent impedance R_2 measured across the transmission lines at bb_1 would be

$$R_2 = \frac{R_1^1 r_2}{R_1^1 + r_2}$$

Thus by making Z_1 a little greater than r_1 the equivalent impedance R_1^1 can be made appreciably higher than r_1. Further, since r_2 is greater than r_1 the value of R_2 can

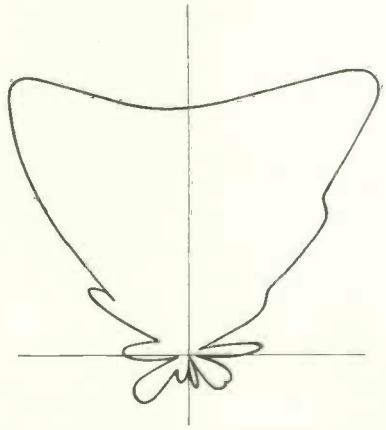

Fig. 4.—*Horizontal polar diagram taken at* 100 *yards from centre of array. Type of array shown in Fig.* 2.

be made greater than the value of r_1. In a similar manner by allowing small reflections in the quarter wavelength of feeders between adjacent radiators, the values of R_3, $R_4 - R_7$ can be progressively increased until finally $R_7 = Z_0$, the surge impedance of the transmission line. In the foregoing

discussion it has been assumed that all the radiators behave as pure resistances. This assumption is only correct in the case of the end radiators, *i.e.*, those having a total length of half and one wave. However,

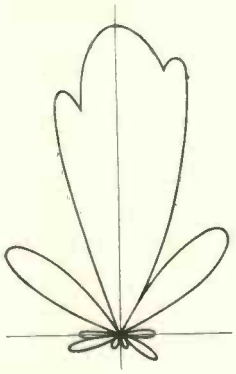

Fig. 5.—*Horizontal polar diagram taken at 250 yards from centre of array. Two parallel units each similar to type of array shown in Fig. 2.*

the unbalanced reactance components in radiators of intermediate length are not serious in their effects, and by varying the lengths of individual radiators and the impedance of the twin feeders connecting adjacent radiators, it is possible to produce excellent matching conditions and very low radiation in the backward direction. Fig. 4 shows the horizontal polar diagram of one vertical type unit measured at a height of about 5 feet above ground level. The slight irregularities are due to local interference effects.

Many units can, of course, be combined to form an array. The polar diagram of two such parallel units, spaced one wavelength apart, is shown in Fig. 5. The single unit, however, will probably have the greatest application, particularly to ship-shore services requiring a beam at the fixed stations to cover a broad sector of the earth's surface. Several single vertical units can be grouped round one central tower with a resulting economy of space and cost. The units can also be arranged horizontally. For the sending and receiving of waves longer than about 20 metres, the horizontal type will usually be preferable as it obviates the use of high and expensive supporting structures.

The author thanks the Engineer-in-Chief to the British Post Office for permission to publish this paper. He also expresses his appreciation of the assistance given him by Messrs. W. Bewick and J. A. Sheppard in adjusting and testing the aerials.

LEIPZIG.

The new Lorenz-built broadcasting station at Leipzig is the biggest and most powerful in Germany, using a power of 120 kW. in the aerial. The transmitter is crystal-controlled. There are in all seven stages, the final stage employing two 150 kW. valves in push pull.

Methods of Investigating the Vibrational Frequencies of Conical Shells and Loud Speaker Diaphragms.*

By N. W. McLachlan, D.Sc.

ABSTRACT.

THE applications and limitations of known methods to ascertain the symmetrical vibrational frequencies of conical shells is described. The first method involves bridge measurement of motional resistance and inductance; the second involves measurement of the steady air pressure on the axis; whilst the third consists in recording the acoustic output when the shell is electrically impulsed.

1. Bridge Method.

In experiments on loud speaker diaphragms it is often necessary to measure the effective resistance and inductance with the driving agent fixed and free.† If the motional or

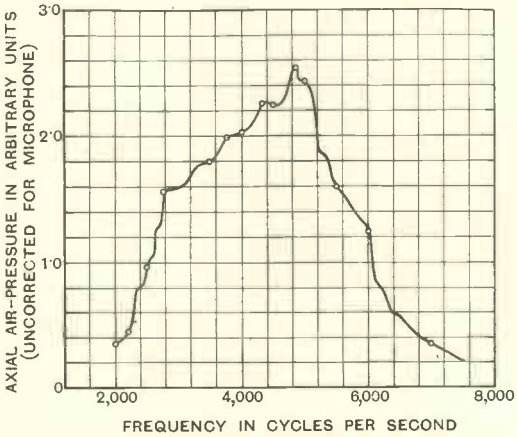

Fig. 1.—*Axial air-pressure curve of 90° free edge paper cone 12 cm. radius driven by coil 2.5 cm. radius and mass 0.6 gm. The curve is completely uncorrected. The value of the main resonance is actually about 3,000~.*

apparent radiation resistance is plotted against frequency the maxima indicate modes of vibration. Some of these are due to the air column within the cone‡ and others to the diaphragm *per se*. Owing to the shape of the resistance/frequency curve above 2,000~ it is not always possible to discriminate between the various modes. When

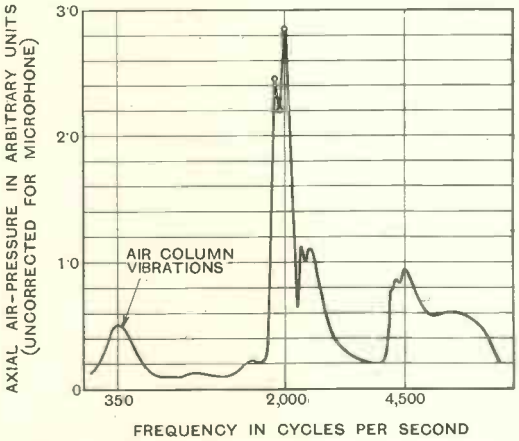

Fig. 2.—*Axial air-pressure curve of 30° free edge paper cone 12 cm. radius driven by coil 2.5 cm. radius and mass 4.7 gm. Microphone about 180 cm. away. The resonance at 350~ corresponds to the air-column vibrations.*

a driving coil of very small mass is used, discrimination becomes impossible although the principal mode can sometimes be selected. In this connection the motional inductance and the effective mass§ are useful guides, since they are both zero in the neighbourhood of this mode.

When the frequency exceeds 3,500~ bridge measurements with a telephone become difficult and inaccurate. A heterodyne oscillator and rectifier is needed to reduce the note to about 1,000~. There is also difficulty with the iron loss in the magnet core. It may cause the acoustic output to appear negative.‖

The modes of aluminium and glass cones¶ usually occur above 4,000~, so that trouble

* Received by the Editor, January, 1932.

† *Phil. Mag.*, 12, 771 (1931).

‡ *Nature*, Letter, Feb. 6th, 1932, also *Proc. Phys. Soc.*, 44, 408 (1932).

§ *Proc. Phys. Soc.*, 44, 88 (1932).

‖ *Phil. Mag.* 12, 771 (1931). *Proc. I.R.E.* 19, 2030 (1931).

¶ *Proc. Phys. Soc.*, 44, 408 (1932).

with the iron may arise here. Also the resonance peaks are so sharp (see Figs. 3, 4) that detection is arduous and uncertain.

In general a bridge method is irksome and slow when it is merely desired to determine a few vibrational modes. It is useful, however, when an approximate estimate of the relative output over a frequency band is required.

2. Axial Air-Pressure Method.

The apparatus associated with this method of measurement is too well known to need description in detail. Briefly a curve of axial pressure is taken over a frequency band by aid of a calibrated condenser microphone situated in a highly damped enclosure. The cone and the microphone should be separated by at least 10 radii of the former.

A typical curve for a paper diaphragm driven by a coil of very small mass is depicted in Fig. 1. The main resonance appears to occur at 4,900 ~, although actually it is in the vicinity of 3,000 ~. This curve is therefore illusory, the reasons being: (1) The calibration curve of the microphone is not

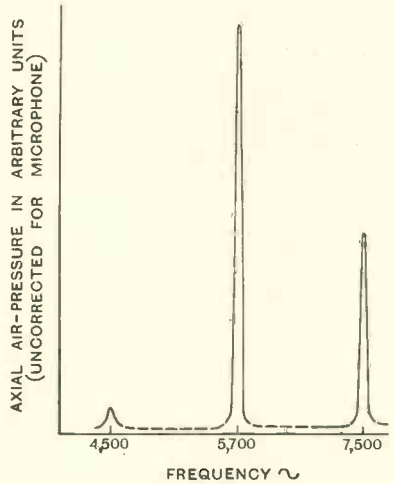

Fig. 3.—*Axial air-pressure curve of 107° glass lamp shade 12.7 cm. radius. The peaks correspond to one, two and three nodal circles. They are remarkably precipitous and can be detected readily by ear. The maximum output occurs at 5,700 ~.*

a horizontal line, since it rises above 1,000 ~; (2) the coil current is not constant, since uniform voltage is applied to the power valve; (3) owing to focussing the axial air pressure does not represent the power radiated—excepting below about 400 ~. In general *all* the data necessary to convert axial pressure to power radiated will not be available. Neglecting item (2) the following may be useful. Assume the spatial distri-

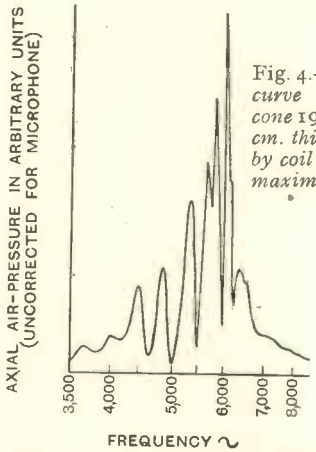

Fig. 4.—*Axial air-pressure curve of 90° aluminium cone 19 cm. radius 8×10^{-2} cm. thick (31 mils) driven by coil 2.5 cm. radius. The maximum output occurs at 6,000 ~.*

bution to be identical with that of a rigid disc of equal radius with the cone. The axial air pressure for the disc is fairly constant above 1,500 ~ and the output varies* as $1/f^2$. The relative output from the cone between say 1,500 and 3,500 ~ is found by correcting for the microphone and multiplying the square of the axial air pressure so found by $2.25 \times 10^6/f^2 = (1{,}500)^2/f^2$. This is only a rough guide since the effective radius decreases with increase in frequency.

In general, however, when this impasse arises, it is preferable to use the impulse method described in section 3. As shown in Figs. 2, 3, 4, there are cases where the air-pressure method is rapid and useful, especially when the modes are separated by deep valleys, *e.g.*, the glass cone of Fig. 3.

3. Impulse Method.

This has been described elsewhere.† Broadly it consists in electrically impulsing the cone and taking a record of the acoustic output using a condenser microphone in a highly damped enclosure. By aid of a timing wave of say 1,000 ~, the vibrational frequencies of the impulsed structure can be determined.

The experiment can also be performed by suddenly stopping or starting a pure a.c. in the coil. It is useful to take results with

* *Phil. Mag.*, 7, 1011 (1929).

† *Wireless World*, 3rd and 10th April (1929). *Phil. Mag.*, 11, 1–54 (1931).

different frequencies and various values of the magnetic field.

Several illustrative records are shown in Fig. 5. Record A is for an aluminium cone 7.5×10^{-3} cm. thick, 12 cm. radius, apical angle 90° driven by a coil of 4 gm. and elastically supported at the edge.* The oscillation is not a simple damped sine wave, since there is more than one mode. It appears that the frequency is variable initially but settles down to a steady value corresponding to the main mode. The preliminary kick at P is of interest and use.

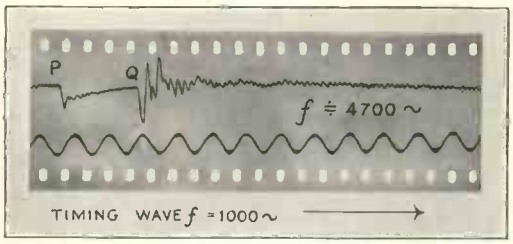

A.

Fig. 5.—**A.** *Impulse record of thin sheet aluminium cone with seam. Timing wave* 1,000~. *Mic. at* 80 *cm. on axis.* **B.** *Impulse record of thick spun aluminium cone of* Fig. 4. *Timing wave* 2,000~. *Mic. at* 180 *cm. on axis.* **C.** *Impulse record of thick cast glass lamp shade of* Fig. 3. *Timing wave* 2,000~. *Mic. at* 187 *cm. on axis. This distance can be calculated from the record,* e.g., $\frac{3.4 \times 10^4 \times 11}{2000} = 187$ *cm.* 3.4×10^4 *cm./sec. is the velocity of sound and* $\frac{11}{2000}$*th sec. the time for the sound to travel through the air from the cone to the microphone.*

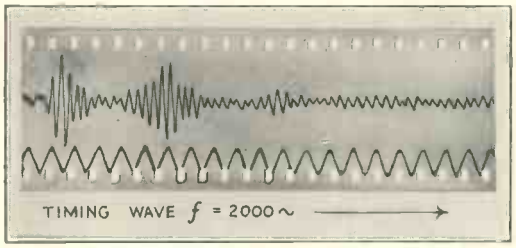

B.

It is due to induction between the driving coil and the microphone leads. When one forgets to measure the distance between cone and microphone, it can be calculated from the record. The interval between P and Q is the time taken for the sound to traverse the intervening space. Alternatively if the distance is known the velocity of sound can be calculated!

Record B pertains to the free edge spun aluminium cone of Fig. 4, 19 cm. in radius, 8×10^{-2} cm. thick driven as above. Relay chatter prevented a clean make and break. However, the gradual change in frequency through the nodal group can be traced by measuring the original record.

Finally record C relates to the conical glass lamp shade of Fig. 3. The acoustic output was so small that considerable amplification had to be employed. Consequently the preliminary inductive kick is very prominent. The oscillation which starts at Q is small but persistent, due to low decrement. It never actually dies away before break and a faint trace is visible between P and Q. The record is superposed on a low frequency oscillation due to the resistance-capacity and transformer couplings

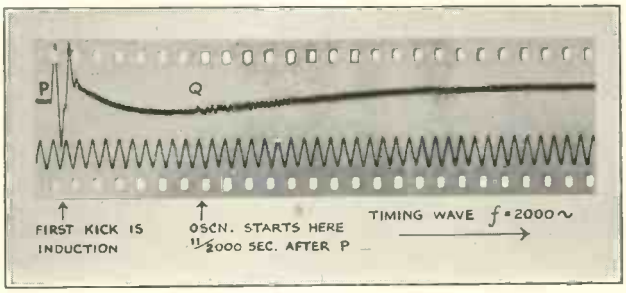

C.

between the valves of the microphone amplifier, and those prior to the oscillograph.†

This method of obtaining the vibrational frequencies is very useful for refractory cases of the type illustrated in Fig. 1.

4. Conclusion.

The method selected to discover the modes of a conical shell or other structure depends upon conditions. The latter have been indicated above. All three methods which have been described‡ require apparatus of an elaborate and costly nature, but this is found in any well-equipped acoustic laboratory.

* This is the cone reported in *Phil. Mag.*, 12, 804 (1931).

† *Wireless World*, 7th Aug. (1929).

‡ Another impulse method is described in *Phil. Mag.*, 12, 142 (1932).

Correspondence.

Letters of technical interest are always welcome. In publishing such communications the Editors do not necessarily endorse any technical or general statements which they may contain.

"Demodulation."

To the Editor, The Wireless Engineer.

SIR,—In a letter published in the July number of *The Wireless Engineer*, Mr. Colebrook criticises a previous letter of mine (*W.E.*, Oct., 1931), and suggests that it is merely a step towards what may be called the Callendar-Appleton theory, which he expounds. Actually the arguments in my letter go a step beyond the Callendar-Appleton theory, and are based on a consideration of "the dependence of the response (of the detector) on the rate of change of carrier amplitude." (The quotation is from Mr. Colebrook's letter.) Mr. Colebrook's two statements about my letter would be correct if my arguments were those he suggests, but I fear he has misread the letter. It is a matter of great disappointment to me that I should have failed so completely to convey my meaning, and I hope you will be able to find space for this rather lengthy letter in which I attempt to present the relevant aspects of the phenomena as they appear to me, including something new.

Suppose for example we are interested in receiving Brussels No. 2 (887 kcs.) at a situation within 30 miles of the Regional transmitter at Brookmans Park (843 kcs.), but find that with a modest receiver the Regional programme is heard over a band of about 100 kc. in the receiver tuning. This interference is perhaps found to be somewhat reduced when the Brussels carrier wave is actually being received. The problem is to know by how much the acoustic interference is reduced by the presence of the carrier wave of the Brussels transmission. Owing to the phenomenon which may be called "predominant carrier selectivity," explained by Beatty (*W.E.*, June, 1928), we must transfer our attention to the radiofrequency component which is strongest at the input to the detector; this will be the Brussels carrier wave. We then consider how this is modulated by the Regional transmission, and it is found, as explained by Butterworth (*W.E.*, Nov., 1929), that in addition to the 44 kc. difference frequency modulation the mean radiofrequency amplitude is increased from S to approximately $S + \frac{1}{2}\frac{W}{S} \cdot W$, if S (strong) and W (weak) are respectively the amplitudes of the Brussels and London Regional carrier waves. This phenomenon might well be described as single sideband cross-modulation, for it is seen that the amplitude modulation of the Regional carrier (a single sideband) is partially transferred to the predominant (Brussels) carrier. The result is that the Regional programme is heard in the detector output and with a perfect detector from which the output is at every instant proportional to the radiofrequency amplitude, the acoustic amplitude is $\frac{1}{2}\frac{W}{S}$ of that when the Brussels carrier is absent. So far the facts are widely known but it is hoped that the method of presentation will help towards an understanding of the little known facts to follow, which deal with the defects of actual detectors.

The simplest assumption about the detector circuit is that it comprises a perfect straight line rectifier and an output load resistance R shunted by a condenser C. It will be a property of such a circuit that *if the Resistance* (R_a) *of the rectifier when conductive is very much smaller than* R, it is possible to charge the condenser C more rapidly through the rectifier than to discharge it through the load resistance; that is to say, the charge on the condenser will respond *more rapidly* to an increase of radiofrequency amplitude than to an equivalent decrease. (This is the Callendar-Appleton hypothesis, with the exception that statements of this hypothesis have not included the important proviso in italics). The effect may be described as a choking of the detector and may operate in the example we are considering, for the 44 kc. modulation, due to the interfering Regional transmission, is so rapid that the average charge on the condenser (C) may rise above that corresponding to the mean value of the radiofrequency input. Moreover, we wish to calculate this increase which represents additional interference.

To recapitulate, the input radiofrequency E.M.F. at the input to the detector due to the Brussels carrier is S, by the addition of the Regional carrier (W) the *mean radiofrequency amplitude* is increased to $S + \frac{1}{2}\frac{W}{S} \cdot W$. Further, owing to the detector choking effect just described the output from the detector is increased from

$$k\left(S + \frac{1}{2}\frac{W^2}{S}\right) \text{ to } k\left(S + \frac{1}{2}\frac{W^2}{S} + wW\right)$$

on account of the 44 kc. modulation of the Brussels carrier. In this expression k is a constant factor representing the ratio $\frac{\text{D.C. output potential}}{\text{H.F. input potential}}$ for the detector and w is the quantity representing the additional interference which we have to evaluate.

A consideration will show that w depends directly on the curvature of the detector response curve (of the type introduced in my article on "The Detector," *W.E.* Sept., 1932). If the curvature is slight over the working range the additional interference will be negligible. From the discussion of the response curve in my article we can at once set down the conditions necessary for the working range of the response curve to be nearly straight; these are (1) $\frac{W}{S}$ small or (2) CR small so that the detector output follows the 44 kc. modulation, thus reducing the working range. Alternatively (3), if R is not many times greater than R_a the response curve is fairly straight over a considerable range. These alternative stipulations might have been made without reference to the response curve. The response curve or its equivalent must, however, be introduced in an attempt to calculate the

additional interference represented by w. I have made such calculations by the obvious arithmetical method of tracing out the variation of the detector output from one radiofrequency cycle to the next by means of the response curve and the curve of the radiofrequency envelope. The result of such calculations indicates that under normal conditions, with interference that is tolerable and an ordinary detector capable of providing good quality, w is completely negligible.

In particular for the example under consideration, in order to get an appreciable amount of additional interference suppose that $\frac{W}{S} = 0.2$; we also require R/R_a to be large, say 20, then for $R_a = 20{,}000\omega$, $R = 400{,}000\ \omega$; for such a value of R a normal value of C would not exceed 0.0001 μF. The corresponding response curve is (*b*) of Fig. 8 (*c*) of my article referred to. The working range is for V_0/E_s between 0.63 and 0.93. Over this range the response factor varies by 25 per cent. and the value of w derived is 0.07. The acoustic interference from the Regional programmes is therefore reduced to $k\frac{\left(\frac{1}{2}\frac{W^2}{S} + wW\right)}{kW} = \frac{1}{2}\frac{W}{S} + w = 0.17$ of its value when the Brussels carrier is absent. With a normal detector having $R_a = 30{,}000\Omega$ and $R = 250{,}000\Omega$, even for $\frac{W}{S} = 0.2$, w is less than 0.01, however large C may be. This limiting condition is interesting; it is found that for $\frac{1}{2}\frac{W}{S} + w$ to approach unity under any circumstances $\left(\text{always assuming } \frac{W}{S} < 0.5\right)$, R must be many hundreds of times greater than R_a.

It should now be clear that in the experiments reported by Professor Appleton (*W.E.*, July 1932) the marked (though not large) increase of mutual interference with increase of the grid condenser (C) is not due so much to the time constant CR as to the high value of R, which was in this case 3 megohms. I venture to predict that if the experiments were repeated with $R = 300{,}000\Omega$ a very much smaller effect would be found even with C 10 times as great. (If, however, $C > 0.1\ \mu$F the response to the 300 cycle modulation is so small that I would not uphold my prediction without further investigation.)

In conclusion, may I summarise the main points in this letter. The "apparent demodulation" phenomena are discussed, distinguishing three known effects described as (1) predominant carrier selectivity (Beatty, *W.E.*, June, 1928), (2) single sideband cross-modulation (Butterworth, *W.E.*, Nov., 1929), and (3) the detector choking effect (Lewis, *W.E.*, Oct., 1931; Appleton, *W.E.*, April, 1932). The detector choking effect is discussed more fully. It is pointed out that in order to introduce appreciable additional interference from this source three conditions must be *simultaneously* satisfied, namely (*a*) strong interference, $\frac{W}{S}$ large; (*b*) CR the time constant of the detector output load large (so that the response to the carrier difference frequency is small), *and* (*c*) R the detector output load resistance many times greater than R_a, the resistance of the rectifier when conductive. Unless all these conditions are satisfied the detector choking effect will be negligible. Calculations of the additional interference to be expected due to the detector choking effect may be made directly from detector response curves of the type introduced in my article on "The Detector" (*W.E.*, Sept., 1932). A practical case of interference is discussed to illustrate the results of such calculations. It may be added that it is easy to avoid curvature of the response curve by keeping the detector grid leak or other output resistances low; both the detector choking effect and distortion are thus avoided. The golden rule may thus be stated as R not greater than 10 R_a, which agrees with the best current practice.

W. B. LEWIS.

Grid Bias from Anode Current.

To the Editor, The Wireless Engineer.

SIR,—The article by Mr. F. J. A. Pound on Grid Bias and Loss of Bass in your August issue, has interested me very much. I agree with his explanations and circuits in the cases of Figs. 1, 2 and 3, but I am doubtful about Fig. 4, as in my opinion the resistance R is taking no part at all of the audio-frequency component in the case of push-pull valves.

I should be very glad indeed if, in the case of directly heated push-pull valves, Mr. Pound would give me his views on the following points:—

1. Do the resistances R_1 in Fig. 4 carry the audio components?
2. If not, are push-pull valves defective in this respect compared with parallel valves or with a single parallel-fed valve?

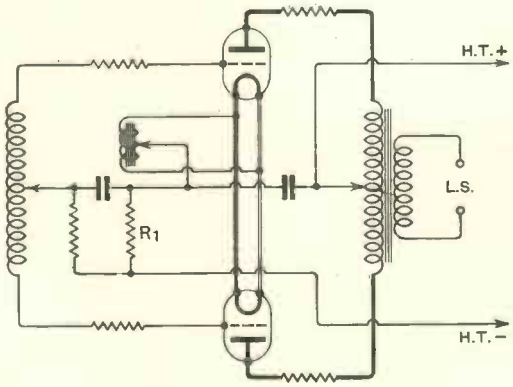

I give a diagram showing the audio frequency in heavy lines.

J. C. VAN REYSSCHOOT.

To the Editor, The Wireless Engineer.

SIR,—The point raised by Mr. J. C. van Reysschoot is an interesting case of alternative

arrangements each of which provides immunity from a disadvantage possessed by the other.

In the arrangement which he has drawn the two valves are biased by a common voltage dropping resistance R_1 which carries the anode current of both valves, and since this resistance joins two points of equal audio frequency potential it will not carry any audio frequency current. So long as a perfect balance exists the portion of the diagram shown thickened forms a closed oscillatory circuit as far as the audio frequencies are concerned.

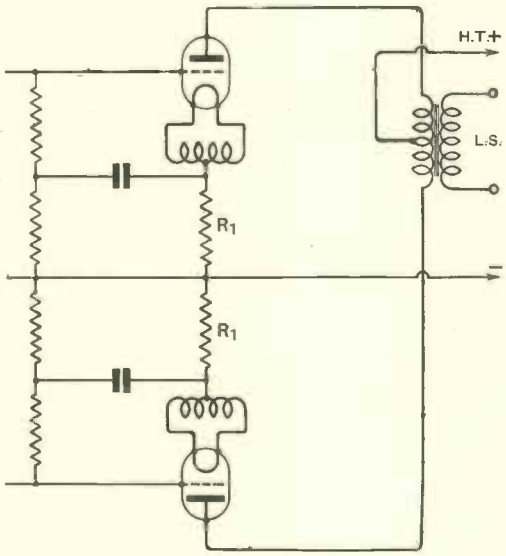

The circuit, Fig. 4, reproduced from Mr. Pound's article, W.E., August, 1932.

The circuit of Fig. 4, however, represents what is considered better practice with modern high efficiency valves in that the separate biasing resistances R_1 enable the anode currents to be equalised and so give the best chance of securing accurate matching of the two halves of the circuit. In this case, however, it is clear that these resistances form an integral part of the audio frequency oscillatory circuit and will therefore have the effect of augmenting the valve impedance as already described.

For the reason stated above neither the decoupling filter nor the by-pass condenser shown in Mr. van Reysschoot's diagram are necessary, since there are no audio frequency voltages to be dealt with by these components.

If the two push-pull valves remain perfectly matched the arrangement with a single biasing resistance common to both valves is greatly to be preferred; but, unfortunately, the "if" is an unpleasantly large one and the circuit of Fig. 4 is therefore generally more satisfactory.

F. J. A. POUND.

A Practical Criterion of Selectivity.

To the Editor, The Wireless Engineer.

SIR,—The question of the accurate description of the selectivity of a receiver is of very considerable importance, but no really satisfactory method seems to have yet been suggested. It is the universal practice in America to describe the selectivity of a receiver by means of curves showing the voltage input to the aerial required to give a standard output (50 milliwatts at 400 cycles and 30 per cent. modulation), and this procedure has been recommended as standard by the Institute of Radio Engineers. The opposite procedure has been suggested by others, notably Mr. H. A. Thomas of the N.P.L., who suggested plotting curves for the audio-output with a fixed R.F. input to the aerial. (*See J.I.E.E.*, June, 1932, for paper and discussion on same.)

In practice, however, what we desire to know is the relative field strength required from an unwanted station to give *just appreciable* interference: we are not at all interested in conditions where the interference intensity exceeds this "appreciable" level, nor where it is below audibility. But this practical criterion cannot be obtained directly from either of the above suggested sets of data, owing to the unspecified action of the detector, which may be functioning either as a square law detector or a linear detector with or without "demodulation" effects. For instance, if a curve of the type used in America shows that the interfering station on an adjacent channel (9 kc off tune) requires a relative field strength of 100 to give the same output as the desired station, the relative field strength required to give only 1/10th of the volts output of the desired station is quite uncertain and may be anything between 10 and 40. Conversely, if the N.P.L. shows us that the volts output for a transmission at 9 kc off tune is 1/1000th of that when in tune, we still cannot say exactly which stations will be receivable in practice without interference, and which will not.

I suggest that the difficulty might be got over by assigning an arbitrary limit, say 10 per cent., for the relative audio-volts output required for appreciable interference. The test would be performed by applying to the receiver a voltage representing the desired carrier and having a suitable magnitude (say, such as would give the full rated output of the set for 100 per cent. modulation): we then plot curves for the relative voltage from another transmission required to give the assigned limit of appreciable audio interference. We here, of course, employ an equal percentage modulation for each transmitter and a somewhat arbitrary output level, but the criterion thus obtained will be an equitable one under any reasonable practical conditions, since the detector in the test will at least be acting in the same way as in practice.

The figure of 10 per cent. is suggested as the result of some rough experiments, but this limit would, of course, have to be fixed by some responsible body, the interference being best taken as that which is just inaudible in the quietest parts of an average transmission.

M. V. CALLENDAR,
Research Dept., Lissen, Ltd.

Abstracts and References.

Compiled by the Radio Research Board and reproduced by arrangement with the Department of Scientific and Industrial Research.

PROPAGATION OF WAVES.

RADIO COMMUNICATION OVER 170 MILES WITH ULTRA-SHORT WAVES [MARCONI'S RECENT RESULTS]. (*Nature*, 20th Aug., 1932, Vol. 130, No. 3277, p. 269.)

A note on the recent 57-cm tests between Rocca di Papa, near Rome, and Cape Figari, Sardinia. "The experiments prove that the range of communication with very short waves must extend much farther than the visible horizon."

STUDIES IN RADIO TRANSMISSION [SHORT WAVES]. —T. L. Eckersley. (Summary in *Electronics*, Aug., 1932, p. 264.)

Another summary of the I.E.E. paper referred to in August Abstracts, p. 454.

NOTE ON RECEPTION OF RADIO BROADCAST STATIONS AT DISTANCES EXCEEDING 12 000 KILOMETRES [BYRD ANTARCTIC EXPEDITION].—L. V. Berkner. (*Proc. Inst. Rad. Eng.*, Aug., 1932, Vol. 20, pp. 1324–1327.)

The corresponding observations on short waves were given in the paper dealt with in June Abstracts, p. 334. Author's summary :—Aural observations of broadcast stations were made during the operations of the Byrd Antarctic Expedition, in New Zealand, and between New Zealand and Antarctica. Tables are given showing stations most frequently heard. Interference between very widely separated stations on the same frequency is mentioned. The character of fading is found to be slow and steady compared to the rapid fluttering and fluctuation of the high frequencies. The tables show that stations are heard over long paths during total path darkness on frequencies scattered throughout the broadcast band, indicating that no marked increase in absorption is present, under these conditions, through this frequency range.

ECLIPSE EFFECTS ON RADIO [IN AMERICA]. (*Electrician*, 9th Sept., 1932, Vol. 109, p. 304.)

"According to 'The Times' correspondent in New York, observations made at various points during the eclipse showed a general increase in statics on the longer wavelengths. . . . Fading also increased and was much more pronounced on signals sent from east to west across the U.S. than on those travelling in the opposite direction. The 195-metre wave of an aeroplane flown over Long Island faded out entirely for an hour. The National Broadcasting Company stated that the eclipse added distance and signal strength to ultra-short wave transmission." Measurements on the electrical state of the atmosphere showed some variation in potential.

INFLUENCE OF SOLAR ECLIPSE UPON UPPER ATMOSPHERIC IONISATION.—S. Chapman. (Summary in *Sci. Abstracts, Sec. A*, Aug., 1932, Vol. 35, No. 416, pp. 740–741.)

ELECTRON SHADOWS IN "DOUBLE ECLIPSE" OF AUGUST 31ST. (*Electronics*, Aug., 1932, pp. 249 and 267.)

THE WIRELESS ECLIPSE : CORPUSCULAR IONISATION "NOT PROVEN"? (*Wireless World*, 16th Sept., 1932, Vol. 31, p. 273.)

SHORT WAVES AND THE SOLAR ECLIPSE [OBSERVATIONS ON WAVELENGTHS BETWEEN 16 AND 25 METRES]. (*World Radio*, 9th Sept., 1932, Vol. 15, p. 541.)

See also letters, *ibid.*, 23rd September, p. 651.

RADIO DURING SOLAR ECLIPSES [1929 POULO CONDORE RESULTS].—A. E. Kennelly. (*Electronics*, August, 1932, pp. 248–249.) *Cf.* Abstracts, 1930, pp. 151 and 206 ; 1931, p. 30.

THE EFFECTS ON D.F., FADING, ETC., OF "ELECTRO-INVASIONS" OF THE ATMOSPHERE : THE CONNECTION WITH AURORA.—Düll.. (*See* abstracts under "Directional Wireless.")

FADING AND NIGHT DISTORTION [ABSENCE OF MIDNIGHT FADING IN SPRING AND AUTUMN : FADING PERIODS OCCURRING IN CYCLES : ETC.]. (*World Radio*, 5th Aug., 1932, Vol. 15, p. 269.)

ANORDNUNG FÜR ECHOMESSUNGEN AN DER IONOSPHÄRE (Equipment for Echo Measurements on the Ionosphere [with Rapid Choice of Six Wavelengths : Cathode-Ray Observation with Circular Time Base]).—G. Goubau and J. Zenneck. (*Hochf : tech. u. Elek : akus.*, Sept., 1932, Vol. 40, No. 3, pp. 77–82.)

The transmitter and receiver are designed so that they can be changed, in a few seconds, to wavelengths of 1 000, 500, 250, 150, 80 and 40 metres. The circular time base, with radial deflection, is the one referred to in October Abstracts, p. 596.

NEW DEVICES FOR RECORDING KENNELLY-HEAVISIDE LAYER REFLECTIONS.—H. R. Mimno and P. H. Wang. (*Phys. Review*, 1st Aug., 1932, Series 2, Vol. 41, No. 3, p. 395.)

Abstract only. The devices referred to are (1) an improved form of the "long film" type of oscillograph, fitted with a magnetic clutch, shock absorber, and magnetic brake, and (2) a high speed chronograph giving an accurate record of layer heights over an extended period of time.

A POSSIBLE CONNECTION BETWEEN THE TROPOSPHERE AND THE KENNELLY-HEAVISIDE LAYER.—I. Ranzi. (*Nature*, 3rd Sept., 1932, Vol. 130, p. 368.)

The writer suggests the existence of a connection between the troposphere and the Kennelly-Heaviside layer ; he finds that "abnormal increases of ionic density in the *E* region are accompanied by particular isobaric situations, characterised by the presence of barometrical depressions at the place of observation or in the north of it."

EXPERIMENTAL CONFIRMATION OF THE SELECTIVE ABSORPTION OF HERTZIAN WAVES PRODUCED BY AN ELECTRONIC GAS IN A MAGNETIC FIELD.—G. Todesco. (*Lincei Rendic.*, No. 2, Vol. 15, 1932, pp. 144–150.) *Cf.* August Abstracts, p. 454.

A THEORY OF THE OZONE OF THE LOWER ATMOSPHERE AND ITS RELATION TO THE GENERAL PROBLEM OF ATMOSPHERIC OZONE.—O. R. Wulf. (*Phys. Review*, 1st Aug., 1932, Series 2, Vol. 41, No. 3, pp. 375–376.)

The writer gives reasons for believing that absorption of light by the molecule o_4 in the earth's atmosphere can account for the removal of the greater part of the radiation in the region 2 200–2 000 Å.

THE INVESTIGATION OF THE VERTICAL DISTRIBUTION OF OZONE IN THE ATMOSPHERE.—F. W. P. Götz. (Summary in *Physik. Ber.*, 16th Aug., 1932, Vol. 13, No. 16, p. 1574.)

DIE ERZEUGUNG ZIRKULAR POLARISIERTER ELEKTRISCHER WELLEN DURCH EINMALIGE TOTALREFLEXION (The Production of Circularly Polarised Electric Waves by a Single Total Reflection).—L. Bergmann. (*Physik. Zeitschr.*, 1st Aug., 1932, Vol. 33, No. 15, pp. 582–583.)

This note describes a lecture experiment for the production of circularly polarised electric waves by total reflection at a water–air surface. Plane waves of length 28 cm are produced under the surface of water by leading 252 cm waves from a valve generator outside to a linear antenna at the focus of a parabolic reflector inside a glass water container. The effect of the dielectric constant of water is to reduce the wavelength by a factor 9. The apparatus is arranged so that the waves strike the surface with angle of incidence 44° 38′, and the reflected waves are observed by reception at another linear antenna with a small indicator glow lamp at its centre. Whatever the angle of inclination of the receiving antenna, the glow lamp gives a clear uniform light. This shows that the reflected waves are circularly polarised. The effect disappears when an aluminium plate is placed on the water surface. Only linearly polarised waves are then received.

NOTES ON THE WAVES IN VISCO-ELASTIC SOLID BODIES.—K. Sezawa. (Summary in *Physik. Ber.*, 16th Aug., 1932, Vol. 13, No. 16, pp. 1565–1566.)

ATMOSPHERICS AND ATMOSPHERIC ELECTRICITY.

AN ESTIMATE OF THE FREQUENCY DISTRIBUTION OF ATMOSPHERIC NOISE.—R. K. Potter. (*Proc. Inst. Rad. Eng.*, Sept., 1932, Vol. 20, pp. 1512–1518.)

"A relation between atmospheric noise intensity and frequency is estimated upon the basis of noise measurement data covering the frequency range between 15 and 60 kilocycles, and 2 and 20 megacycles." Fig. 2 shows the results so far as the north-eastern United States are concerned. Among the generalities deduced are the following:—over the frequency band in which daytime signal strength continually decreases with distance, the noise decreases with frequency; at night this decrease in noise approaches an inverse frequency relation, in the daytime the noise appears to decrease approximately as the inverse of the frequency squared. In the high-frequency range, frequencies around 2 mc/s could be used very effectively for short range (ground wave) circuits during the day, and frequencies around 15 or 20 mc/s at night. "The region of high daytime attenuation agrees reasonably well with that which might be expected either upon the basis of so-called electron resonance in the presence of the earth's magnetic field, or the normal change in attenuation with frequency for 'ground' and 'refracted' waves. The absence of a dip in the night-time curve around 1.4 megacycles is difficult to explain in terms of the electron resonance theory, since, as has been pointed out by Meissner, the resonant effect should be most pronounced during the night."

27 TÄGIGE PERIODE DER "LUFTSTÖRUNGEN" DER DRAHTLOSEN TELEGRAPHIE (27-day Period of Atmospherics in Wireless Telegraphy).—F. Schindelhauer. (*Naturwiss.*, 2nd Sept., 1932, Vol. 20, No. 36, p. 672.)

The writer of this letter finds from records of the number and direction of atmospherics taken at Potsdam that the chief source of atmospherics is to be sought at great heights in the atmosphere, and that it is possible to hear in a wireless receiver "the arrival of the electrons entering the earth's atmosphere from the sun." He has used a method already used by Peters and Ennis in connection with earth currents and finds that a secondary disturbance occurs 27 days after the primary one, just as in the case of earth currents. Curves are given showing the mean number per minute of primary and secondary disturbances respectively for the years 1926–1927 and 1928–1931. In the summer months the radiation fields of lightning flashes obscure the regular course of the curves.

RADIO DIRECTION FINDING EXPERIMENTS [AND SIGNAL STRENGTH MEASUREMENTS] WITH AURORA: "ELECTRO-INVASIONS" OF THE ATMOSPHERE.—Düll. (*See* abstracts under "Directional Wireless.")

TERRESTRIAL MAGNETIC ACTIVITY AND ITS RELATIONS TO SOLAR PHENOMENA.—J. Bartels. (Summary in *Sci. Abstracts, Sec. A*, Aug., 1932, Vol. 35, No. 416, p. 741.)

ECLIPSE EFFECTS ON RADIO [IN AMERICA].—(*See* under "Propagation of Waves.")

AURORAE AND COSMIC RAYS.—A. Dauvillier. (*Electrician*, 12th Aug., 1932, Vol. 109, pp. 189–190.)

Summary of a communication presented to the Société Française des Electriciens in June, dealing with the author's theories of terrestrial and solar electromagnetic phenomena (Abstracts, April, pp. 218–219, and March, p. 159.)

The author regards cosmic rays "as X-rays produced by the impact of the solar electrons on the gases of the upper atmosphere, the maximum quanta in their case being reduced to one-tenth of the energy of the solar electrons as a result of

diffusion in the troposphere." Evidence from the influence of the eleven year solar period is necessary for confirmation of this theory.

The flow of solar electrons necessary for the author's theory of the aurora requires some compensating mechanism. This is provided by the emission of jets of positive ions forming the solar prominences known to be associated with the faculae. The rotation of these jets with the sun forms the zodiacal light. An approaching jet magnetises the earth, and demagnetises it after passing, but leaves a slight residual magnetism in the ferromagnetic crust. The author considers that this is the origin of terrestrial magnetism.

LA SECONDE EXPLORATION DE LA STRATOSPHÈRE (The Second Exploration of the Stratosphere).—Piccard. (*Génie Civil*, 3rd Sept., 1932, Vol. 101, No. 10, pp. 235–238.)

No results are given yet, but it is stated that Piccard has declared that the cosmic rays increase in intensity as the stratosphere is penetrated, and the article ends: "It is thus that an experiment, more qualitative than quantitative, made with a specially constructed little tube, has shown that no sooner had the balloon reached the stratosphere than small sound vibrations showed themselves on the tube, as if rain were falling on a galvanised iron roof: these vibrations increased in intensity as the balloon mounted."

INTENSITY OF COSMIC RADIATION IN THE HIGH ATMOSPHERE.—E. Regener. (*Nature*, 3rd Sept., 1932, Vol. 130, p. 364.)

This preliminary letter describes a measurement of "the intensity of cosmic radiation in the high atmosphere, at air pressures down to 22 mm of mercury, by means of two rubber balloons and a self-registering electrometer." The photographic plate and curve deduced therefrom are reproduced; the curve gives the intensity I of the cosmic radiation (I = pairs of ions per cm^3 sec) as a function of the decreasing air pressure (in mm of mercury). The results may be given shortly as follows:—above a height of about 12 km the intensity of cosmic radiation increases less rapidly with increasing height; at lower pressures the intensity tends rapidly to a limiting value, which is found to be 275 I; the cosmic radiation becomes saturated with secondary radiation after it has entered the atmosphere; there seems to be in outer space no gamma radiation from the usual radioactive bodies.

AN INTERPRETATION OF COSMIC-RAY PHENOMENA.—T. H. Johnson. (*Phys. Review*, 1st Aug., 1932, Series 2, Vol. 41, No. 3, p. 393.)

Abstract only. A general expression is found for the ionisation at distance x behind an interface between the absorbing medium and that in which a secondary ray is produced. The constants are determined to give agreement with data for certain transitions; the absorption coefficients of the secondary rays thus determined are found to agree with the energies measured by Millikan and Anderson.

THE NATURE OF THE COSMIC RADIATION.—W. Bothe. (Summary in *Physik. Ber.*, 16th Aug., 1932, Vol. 13, No. 16, pp. 1570–1571.)

Recent results can be explained as a result of corpuscles and their secondary effects. Whether these corpuscles, already charged, penetrate the earth's atmosphere from world space is not yet certain. Possibly the rays exist in space as uncharged aggregates of protons and electrons, which divide into charged components on collision with the molecules of air.

ENERGIES OF COSMIC-RAY PARTICLES.—C. D. Anderson. (*Phys. Review*, 15th Aug., 1932, Series 2, Vol. 41, No. 4, pp. 405–421.)

Author's abstract:—Cloud chamber photographs of cosmic-ray tracks in a magnetic field up to 17 000 gauss are shown. On the assumption that the particles producing the tracks are travelling downward through the chamber rather than upward, particles of positive charge appear as well as electrons. From the specific ionisation along the track it is concluded that the positives are protons, and are not nuclei of charge greater than unity. No evidence is uncovered demanding the introduction of a neutron for cosmic-ray phenomena. Eight examples of associated tracks are shown. Energies range from below 10^6 electron-volts to values in a few cases of the order of 10^9 electron-volts. Energy values for 70 tracks are listed. The scattering of cosmic particles in traversing a 6.0 mm lead plate is measured.

PHOTOGRAPHY OF PENETRATING CORPUSCULAR RADIATION.—P. M. S. Blackett and G. Occhialini. (*Nature*, 3rd Sept., 1932, Vol. 130, p. 363.)

The writers of this letter have been able to photograph with a Wilson cloud chamber the high-energy particles discovered by Skobelzyn (1929 Abstracts, p. 524—two) "by arranging that the simultaneous discharge of two Geiger-Müller counters due to the passage of one of these particles shall operate the expansion itself." Considering the main group of nearly straight tracks obtained, they find that "if the particles were electrons, their *mean* energy must have been greater than 600 million volts, or if protons, greater than 200 million volts."

ELECTRONS AS COSMIC RAYS.—W. F. G. Swann. (*Phys. Review*, 15th Aug., 1932, Series 2, Vol. 41, No. 4, pp. 540–542.)

DIE SPEZIFISCHE KOINZIDENZFÄHIGKEIT DER HÖHENSTRAHLEN HINTER 10 CM BLEI IN SEEHÖHE (The Specific Capacity for Coincidence Production of Cosmic Rays beyond 10 Centimetres of Lead at Sea Level).—W. Kolhörster and L. Tuwim. (*Naturwiss.*, 27th Aug., 1932, Vol. 20, 35, p. 657.)

A preliminary note on measurements of Tuwim's constant $\mathfrak{G}$ giving values from 0.79 to 0.61 as the angle of inclination to the vertical is varied from 0° to 90°. It seems probable that $\mathfrak{G}$ will have a greater value for the harder cosmic rays, in agreement with theoretical predictions.

CALCULATION OF THE ACTION OF THE EARTH'S MAGNETIC FIELD ON A CORPUSCULAR [COSMIC] RADIATION GENERATED IN THE ATMOSPHERE.—B. Rossi. (Summary in *Physik. Ber.*, 16th Aug., 1932, Vol. 13, No. 16, p. 1573.)

THE VERIFICATION OF THE THEORY OF THE VERTICAL TUBE COUNTER EFFECT OF THE COSMIC RADIATION.—W. Kolhörster. (Summary in *Physik. Ber.*, 16th Aug., 1932, Vol. 13, No. 16, p. 1571.)

See also July Abstracts, p. 401, for a letter on the same work.

PROBLEME DER ULTRASTRAHLUNG (Problems of Cosmic Radiation).—G. Hoffmann. (*Physik. Zeitschr.*, 1st Sept., 1932, Vol. 33, No. 17, pp. 633–662.)

A general review of the results and problems of cosmic ray investigation, with full list of literature references to June, 1932.

USE OF ARGON IN THE IONISATION METHOD OF MEASURING COSMIC RAYS.—A. H. Compton and J. J. Hopfield. (*Phys. Review*, 15th Aug., 1932, Series 2, Vol. 41, No. 4, p. 539.)

A SIMPLE [THYRATRON IN TRIP CIRCUIT] COUNTING ARRANGEMENT FOR THE IMPULSES OF A GEIGER-MÜLLER ION COUNTER.—R. Jaeger and J. Kluge. (Summary in *Physik. Ber.*, 16th Aug., 1932, Vol. 13, No. 16, pp. 1571–1572.)

OPTISCHE UNTERSUCHUNG DER FUNKENZÜNDUNG IN LUFT VON ATMOSPHÄRENDRUCK MITTELS DES UNTERDRÜCKTEN DURCHBRUCHS (Optical Investigation of Spark Breakdown in Air at Atmospheric Pressure using the Suppressed Breakdown).—W. Holzer. (*Zeitschr. f. Physik*, 1932, Vol. 77, No. 9/10, pp. 676–794.)

GASENTLADUNG UND DURCHSCHLAG (Gas Discharge and Breakdown [Preliminary Note]).—W. Rogowski. (*Naturwiss.*, 27th Aug., 1932, Vol. 20, No. 35, pp. 659–660.)

THE APPLICATION OF LICHTENBERG FIGURES.—Y. Toriyama and U. Shinohara. (Summary in *E.T.Z.*, 8th Sept., 1932, Vol. 53, No. 36, pp. 870–871.)

ÜBER ELEKTRONENIONISIERUNG VON STICKSTOFF, SAUERSTOFF UND LUFT BEI GERINGEN UND HOHEN DRUCKEN (On Electronic Ionisation of Nitrogen, Oxygen and Air at Low and High Pressures).—K. Masch. (*Archiv f. Elektrot.*, 3rd Aug., 1932, Vol. 26, No. 8, pp. 587–596.)

RADIO AND THE METEOROLOGICAL SERVICE.—L. A. Sweny. (*Wireless World*, 12th August, 1932, Vol. 31, pp. 119–121.)

On the service conducted by the British Meteorological Office in conjunction with those of other countries.

ÜBER DIE ELEKTRISCHEN EIGENSCHAFTEN VON STAUB UND NEBEL (On the Electrical Properties of Dust and Fog).—H. Sachsse. (*Ann. der Physik*, 1932, Series 5, Vol. 14, No. 4, pp. 396–412.)

PROPERTIES OF CIRCUITS.

ON THE CALCULATION OF RESONANCE AMPLIFIERS.—V. I. Siforov. (*Westnik Elektrot.*, No. 11/12, 1931, Sec. I, pp. 422–443.)

A method is described for the calculation of a tuned amplifier for a given stability and selectivity. The relations found for the maximum stable amplification per stage apply not only to the case where the oscillatory circuit lies directly in the anode circuit but also where it is connected through a transformer. The equations give values for the approach to self-excitation, for the optimum coupling between stages, and for the selectivity of multi-stage amplifiers. The effect of the inductance introduced into the anode circuit on the stability of the amplifier is examined. Numerical examples are given. For previous work by the same writer *see* May and June Abstracts, pp. 279 (two) and 340.

A SIMPLIFIED GENERAL METHOD FOR RESISTANCE-CAPACITY COUPLED AMPLIFIER DESIGN.—D. G. C. Luck. (*Proc. Inst. Rad. Eng.*, Aug., 1932, Vol. 20, pp. 1401–1406.)

Author's summary :—The steady state analysis of the general resistance-capacity coupled amplifier stage is thrown into such a form that any amplifier stage is characterised by three easily computed constants which make it possible to read off its complete steady-state performance immediately from three perfectly general analytical curves. These curves are shown, as are some applications of the method.

ÜBER SELBSTERREGUNG VON VERSTÄRKERN DURCH KOPPLUNG DER ANODENSTRÖME (On Self-Excitation of Amplifiers by Coupling the Anode Currents).—W. O. Schumann. (*Archiv f. Elektrot.*, 3rd Aug., 1932, Vol. 26, No. 8, pp. 580–586.)

This theoretical investigation leads to the following conclusions :—" (1) In the case of a two-valve resistance amplifier no self-exciting back coupling of the two anode currents is possible in any way. (2) With a two-valve transformer amplifier self-excitation is possible with ohmic and capacitative back coupling of the two anode currents. (3) In the three-valve resistance amplifier self-excitation is possible by ohmic or by capacitative coupling between the anode currents of the first and third valves, according to the circuit."

WAVELENGTH CHARACTERISTICS OF COUPLED CIRCUITS HAVING DISTRIBUTED CONSTANTS.—King. (*See* under " Transmission.")

SPANNUNGEN, WIDERSTÄNDE UND ABSTIMMUNG BEI GEDÄMPFTEN UND UNGEDÄMPFTEN KREISEN (Potentials, Resistances and Tuning in Damped and Undamped Circuits).—M. Osnos. (*Hochf:tech. u. Elek:akus.*, Sept., 1932, Vol. 40, No. 3, pp. 103–108.)

Author's summary :—It is shown that the general definitions " capacitive resistance $= -\frac{1}{\omega C}$ " and " inductive resistance $= \omega L$," although very convenient for practical calculation, are not tenable in theory. For in the first place they represent relations between *unlike* quantities, so that their derivation from the simple Ohm's law is not strictly correct; and in the second place their transference from undamped to damped circuits leads to great incompleteness and inconsistency.

Simple new definitions are given leading to the equations " capacitive resistance $= \frac{\cos^2\delta}{\omega C} \cdot \tan \omega t$ "

and "inductive resistance $= -\omega L \tan \omega t$," which are of quite general validity, for damped freely oscillating circuits as well as for undamped circuits, if a distinction is made between damped and damping-free non-reactive resistance and cos ρ is made equal to unity for the undamped circuit. In a supplementary section it is shown that another definition of inductive and capacitive resistance is obtained if, in spite of a certain inconsistency and arbitrariness, the ratio of non-simultaneous potential and current values is considered as resistance. In this connection new quantities—"currents of reference" [I_C and I_L, which are shown to differ], "conjugation angle" and "conjugated potentials and currents"—are introduced.

SKIN-EFFECT IN A RING OF CIRCULAR CROSS SECTION [AND THE CALCULATION OF SELF-INDUCTANCE].—V. Fock. (*Physik. Zeitschr. der Sowjetunion*, No. 2, Vol. 1, 1932, pp. 215–236.)

The current distribution in such a conductor lends itself to exact calculation, and the writer derives it directly from the Maxwellian equations and the border conditions by the use of ring co-ordinates: this method of calculating the self-inductance should be applicable to other problems.

THE REPRESENTATION OF ELECTRO-MECHANICAL SYSTEMS BY PURE ELECTRICAL CIRCUITS.—W. Hähnle. (Summary in *Physik. Ber.*, 16th Aug., 1932, Vol. 13, No. 16, p. 1531.)

TRANSMISSION.

ÜBER STATIONÄRE SCHWINGUNGSZUSTÄNDE IN QUARZGESTEUERTEN EIN- UND ZWEIKREISSENDERN (On Steady State Conditions in Quartz-Controlled Single and Two-Circuit Transmitters).—V. Petržílka and W. Fehr. (*E.N.T.*, Aug., 1932, Vol. 9, pp. 283–292.)

A theoretical investigation, with experimental confirmation of the results. The quartz is used in the Pierce connection, and the generator frequency is assumed to be constant. It is found that with the quartz connected between grid and cathode, oscillation can take place only in a zone where the frequency produced by the generator is *less* than the natural frequency of the anode circuit; whereas with the quartz connected between grid and anode the former frequency must be *greater* than the latter. In both cases the penetration coefficient ("Durchgriff") of the valves must not be too large, nor the grid/anode (or grid/cathode, as the case may be) capacities too small, for oscillation to take place. As regards the first point the screen-grid valve is very suitable, but as regards the second it may require auxiliary condensers in order to satisfy equation 15 (*see* also Harrison, 1929 Abstracts, p. 109.) A discussion of equations 21 and 24 and calculations on the quartz crystals employed ($\lambda = 250$ and 593 m) show that if the crystal thickness in the direction of the electrical axis is too small, oscillation becomes impossible: "this explains the failure of the Pierce connection for short waves."

The second part of the paper deals with the two-circuit transmitter by a different method, the first method leading to too complex formulae. It is shown that if the secondary-circuit frequency is varied in the neighbourhood of resonance with the generator frequency, regions of no oscillation appear whose size is determined on the one side by the natural frequency of the anode circuit and on the other by the coupling factor between that circuit and the secondary circuit. The variations of the anode-circuit dissipative impedance and of the currents in the anode and secondary circuits are examined, together with the ratio of these currents. The measurement of $(I_2/I_1)^2$ gives a simple way of determining the damping of the secondary circuit valid for all degrees of coupling: an example is furnished by the application of the method to a circuit of a Telefunken wavemeter. Finally, the conditions for the transference of energy between anode and secondary circuits are discussed.

A NEW METHOD FOR GENERATING ULTRA-SHORT WAVES [DOWN TO A 130-CM FUNDAMENTAL].—G. M. Vinnik and E. K. Zavoisky. (*Westnik Elektrot.*, No. 11/12, 1931, Sec. I, pp. 461–464.)

Two valves are connected to the two ends of a Lecher wire system, the grid of one valve and the plate of the other going to one wire, the plate of the first and the grid of the second to the other wire, thus forming a type of push-pull circuit. Each Lecher wire is broken at the centre by a condenser, the two condensers being bridged by choking coils cross-connected. By using suitable values for these components it is arranged that the system swings in phase instead of in push-pull, and the oscillations are found to be shorter in wavelength, stronger and more readily obtainable than those given by the latter mode. The shortest wavelength thus generated was 130 cm, compared with 200 cm for the push-pull mode. An extension of the circuit is given by which more than two valves can be used to give greater intensity without appreciably increasing the wavelength.

A NEW TYPE OF ULTRA-SHORT-WAVE OSCILLATOR ["STANDING WAVE OSCILLATOR" WITH 12 KW OUTPUT AT MINIMUM WAVELENGTH AROUND 3 METRES].—I. E. Mouromtseff and H. V. Noble. (*Proc. Inst. Rad. Eng.*, Aug., 1932, Vol. 20, pp. 1328–1344.)

Authors' summary:—A new oscillator for generating ultra-short waves, in which the conventional tank circuit is replaced by a portion of concentric transmission line, is described. Electrically, the tube structure forms an integral part of the transmission line. For this the quantity VC/L for the tube must be the same as for the rest of the line, C and L being capacity and inductance per unit length of the line. A comparison of the closed oscillating circuit with the "standing wave oscillator" shows distinct advantages of the latter in the region of ultra-short waves. The mode of connecting the load to the oscillator is discussed. Some of the oscillator characteristics are given for wavelengths of 5 and 3 metres with 15- and 12-kw output, respectively. Mention is made of a marked physiological effect of ultra-short-wave fields.

THE PRODUCTION OF 28 CENTIMETRE WAVES IN WATER BY MEANS OF A 2.5 METRE VALVE OSCILLATOR.—Bergmann. (*See* abstract under "Propagation of Waves.")

The method referred to in July Abstracts, pp. 396–397—Marique.

WAVELENGTH CHARACTERISTICS OF COUPLED CIRCUITS HAVING DISTRIBUTED CONSTANTS [AND APPLICATION TO THE ELECTRON OSCILLATOR FOR ULTRA-SHORT WAVES].—R. King. (*Proc. Inst. Rad. Eng.*, Aug., 1932, Vol. 20, pp. 1368–1400.)

At ultra-high frequencies ordinary condensers and coils lose their significance as capacities and inductances, and hence as tuning devices, and it becomes necessary to utilise the distributed capacity and inductance of suitably arranged systems of parallel conductors of variable length. The writer analyses the wavelength characteristics of simple and coupled valve circuits with distributed constants, and thus extends the interpretation of experimental results presented in his *Ann. der Physik* paper (Abstracts, 1931, p. 221: *see* also 1930, p. 344).

The characteristics thus obtained are compared with the corresponding ones given by Ollendorff for circuits with lumped constants, and the analogy thus exhibited is extended to include the electron oscillator, in order to group these three related types of triode oscillatory circuit under the same fundamental theory. "Encouraging is a private communication from Hollmann in which he agrees that in its general principles the alternative theory of the electron oscillator here presented is not inconsistent with his own extensive theoretical and experimental studies."

PER L'INTERPRETAZIONE DELLE OSCILLAZIONI ELETTRONICHE (The Interpretation of Electronic Oscillations: Parts II and III).—A. Rostagni. (Summaries in *Physik. Ber.*, 16th Aug., 1932, Vol. 13, No. 16, p. 1535.) *See* also June Abstracts, p. 341.

ULTRA-SHORT-WAVE TELEPHONY TRANSMITTER. S. Uda and J. Ikeuchi. (Summary in *Sci. Abstracts, Sec. B*, Aug., 1932, Vol. 35, No. 416, p. 477.)

The transmitter used in the tests referred to in June Abstracts, p. 360. "Of the methods of modulation studied the grid-leak modulation and plate modulation methods are recommended."

TRANSMITTER FOR AMSTERDAM ULTRA-SHORT-WAVE BROADCASTING TESTS.—Nordlohne: Philips' Company. (*See* abstract under "Stations, Design and Operation.")

MODERN RADIO EQUIPMENT FOR AIR MAIL AND TRANSPORT USE [THE G.E.C. TRANSMITTER TYPE RT-76-A].—A. P. Berejkoff and C. G. Fick. (*Proc. Inst. Rad. Eng.*, Aug., 1932, Vol. 20, pp. 1284–1295.)

Authors' summary:—The general requirements for aircraft radio equipment for air mail and transport use are discussed. This is followed by a discussion of the factors which were considered in the design of an aircraft radio telephone and telegraph equipment. A description is then given of the mechanical and electrical features of a specific equipment.

TRAINS OF WAVES EMITTED AT CONSTANT INTERVALS OF TIME.—G. Petrucci. (Summary in *Sci. Abstracts, Sec. B*, Aug., 1932, Vol. 35, No. 416, p. 473.)

Continuation of the work dealt with in 193 Abstracts, p. 439. The factors governing the phenomenon are studied, and the possibility of using it for the emission of radio signals at constant intervals is considered.

THE MEASUREMENT OF THE EFFICIENCY OF VACUUM TUBE GENERATORS BY MEANS OF THE PHOTOELEMENT.—J. Groszkowski. (*Wiadomości i Prace Inst. Radjot., Warsaw*, No. 5, Vol. 3, pp. 61–63.)

See March Abstracts, p. 163, for a French version of this Polish paper.

PREVENTING IMPEDANCE VARIATIONS IN AERIAL CIRCUIT FROM AFFECTING FREQUENCY [ADDITIONAL SCREENING ELECTRODE].—(Patent summary in *Electronics*, Aug., 1932, p. 274: Byrnes.)

RECEPTION.

DIE APERIODISCHE VERSTÄRKUNG VON ULTRAKURZEN WELLEN (The Aperiodic Amplification of Ultra-Short Waves [by the Use of Loewe Multiple Valves with Tuned Choke Coupling]).—M. von Ardenne. (*Hochf:tech. u. Elek:akus.*, Aug., 1932, Vol. 40, No. 2, pp. 65–67.)

The writer considers that the various tests on u.s.w. broadcasting in towns have shown that a satisfactory service over a large urban area is impossible at present except by the use of uneconomic transmission powers. In spite of strenuous efforts to perfect the reaction audion, its use still involves difficulties such as lack of reserve power, earthing troubles, and polarisation complications in connection with the aerial. "All these difficulties would be eliminated if receivers with wider band-breadths and increased voltage-sensitivity were available." For u.s.w. television with its enormously wider side-bands such a receiver is even more necessary, since here it is impossible to use reaction for reducing the damping, for fear of side-band cutting.

In his search for a suitable receiver the writer arrived at the conclusion that instead of truly aperiodic, resistance-capacity amplification (demanding large direct currents), the semi-aperiodic amplification given by tuned-choke amplifiers with broad resonance curves would fulfil the requirements, owing to the wave-range involved being limited by propagation and absorption conditions to about 6.75–7.25 m. "Only by utilising a certain amount of resonance effect and by the application of all the earlier experience in developing and constructing aperiodic amplifiers was it possible to arrive at amplifier units with good efficiency, small current consumption and sufficiently broad frequency band for this critical wave-zone."

Such an amplifier unit consists of two stages of r.f. amplification, with their tuned-choke coupling, embodied in a Loewe multiple valve. Each stage has an extra-long screen grid which is made into an equipotential surface by several connecting leads. The coupling choke, tuned to 7 m, is of rigid construction. The two stages are separated by a flat metal screen to prevent stray couplings, and the unit as a whole has an external metallic screening: the anode of the second stage is led out at the top of the bulb and its circuit is outside the

container. The cathode is the latest type of barium cathode, indirectly heated. "The valve gives a slope of 2 mA/v with an average emission of about 5 mA per stage and 200 v anode potential." Measurements taken by methods described by Schlesinger (*see* under "Measurements and Standards") show that with a tuned output circuit of about 800 ohms parallel damping the double unit gives a 10-fold amplification, with a curve whose half-peak breadth is 2×10^6 c/s. For the first stage alone the resonance curve shows an optimum wave of 6.8 m and a half-peak breadth of 8×10^6 c/s.

Since a half-peak breadth of 10^6 c/s is sufficient for very satisfactory television reception, it is possible to narrow the amplification curve by connecting several double units in series, coupling them by external tuned circuits. Thus a four-stage amplifier with two units still has a half-peak breadth of 10^6 c/s and gives a voltage amplification round 100, with a band breadth of about 500 kc/s for a 7-metre carrier.

RECEIVERS FOR ULTRA-SHORT-WAVE BROADCASTING.—Nordlohne: Philips' Company. (*See* abstract under "Stations, Design and Operation.")

LINEAR DISTORTIONS IN BROADCAST RECEIVERS AND THEIR COMPENSATION BY LOW-FREQUENCY EQUALISATION DEVICES.—A. Clausing and W. Kautter. (*Proc. Inst. Rad. Eng.*, Sept., 1932, Vol. 25, pp. 1456–1480.)

A. Causes of linear distortions:—(1) Selectivity of tuning device; (2) l.f. distortion in grid and plate circuit of detector stage; (3) effect of frequency characteristics of output valve and loud speaker. Each of these causes is considered in some detail.

B. Compensation of linear distortions by means of l.f. equalisers:—(1) General, including the requirements of a satisfactory compensation; *e.g.*, it must be easy to cut out on changing from broadcast reception to gramophone pick-up, and must not depend on the type of loud speaker; in order to obtain simple circuit elements, it must be effected at a point where little power is transmitted, as in the plate circuit of the detector or of an intermediate valve between this and the power stage. (2) Main types of equalisation for broadcast sets:—(*a*) equaliser consisting of condensers and resistances; (*b*) equalisation by means of tuned circuits (shunt equalisation); (*c*) by means of series resonances (series equalisation, including the use of a magnetic shunt —"leakage foil"—in the leakage path between primary and secondary transformer windings); and (*d*) by means of coupling through different channels (high frequencies through a capacity, low frequencies through a choke only to one part of the coupling resistance). Each of these methods is discussed, with examples.

"These methods will become unnecessary only when it becomes possible to build cheap, reliable r.f. band filters with constant band width but variable average transmission range. This is not as simple as the names applied to all possible designs would lead us to believe."

PROBLEMS IN SELECTIVE RECEPTION.—M. V. Callender. (*Proc. Inst. Rad. Eng.*, Sept., 1932, Vol. 20, pp. 1427–1455.)

From the Lissen laboratories. Author's summary:—"In this paper we are comparing from a theoretical standpoint the methods of attainment of the highest degree of selectivity required by present broadcasting conditions, and investigating the distortions introduced by receivers employing such methods in practice.

"The equations for magnification and phase differences introduced by one or more simple tuned circuits are first obtained in a convenient form: corresponding expressions are obtained for the band-pass circuit, and a note is appended upon circuits with reaction. We then investigate the effect of the detector by determining the audio output from a square law rectifier when an amplitude modulated wave of general form is applied to it: the effective selectivity of, and audio distortion introduced by, the tuners previously discussed are thus obtained. The whole process is then repeated for the more difficult case of the linear detector, and the harmonic distortion here calculated; the 'demodulation' effect which occurs when two transmissions are received simultaneously is considered in theory and practice.

"The two rival systems of selective tuning—*viz.*, the band-pass and the simple sharp tuner with audio tone correction—are compared as regards their ability to deal with the direct and also the heterodyne interference from unwanted neighbouring transmissions: the probability of frequency and harmonic distortion in the resulting reception under practical operating conditions is also discussed, and it is shown in particular that the band-pass system is inferior on at least two of these four heads."

TONE CORRECTION EXPLAINED.—(*Wireless World*, 26th August, 1932, Vol. 31, pp. 172–173.)

A BALANCED WAVE TRAP.—W. S. Percival. (*Wireless World*, 16th Sept., 1932, Vol. 31, p. 274.)

In this method of eliminating interference from a local station, a bridge circuit is employed, one arm of which is formed by an ordinary rejector circuit in series with one half of the aerial transformer primary, and the other arm by a variable resistance and the remaining half of the aerial transformer primary.

DYNAMIC SYMMETRY IN RADIO DESIGN.—A. Van Dyck. (*Proc. Inst. Rad. Eng.*, Sept., 1932, Vol. 20, pp. 1481–1511.)

Author's summary:—This paper reviews some of the principles of dynamic symmetry, the science of vital relations of areas, which was the basis of ancient Greek art, as rediscovered by Jay Hambidge about fifteen years ago, and described in his works "Dynamic Symmetry" and "The Diagonal," published by the Yale University Press. A list of the most important shapes is given, and diagrammatic examples of them, which are useful for reference purposes. Some methods and suggestions for application to radio design are given.

THE TREND OF PROGRESS [OLYMPIA RADIO SHOW]. —(*Wireless World*, 2nd September, 1932, Vol. 31, pp. 231–244.)

OLYMPIA—1932: OLYMPIA IN REVIEW.—(*World Radio*, 19th and 26th Aug., 1932, Vol. 15, pp. 367–368: 432–433 and 437.)

THE WIRELESS WORLD BABY SUPERHET.—W. T. Cocking. (*Wireless World*, 19th Aug. and 2nd Sept. 1932, Vol. 31, pp. 138–142 and 228–230.)

A four-valve supersonic heterodyne receiver for the amateur constructor. The principal features are:—a pentode frequency changer preceded by a band-pass tuner and followed by a single stage of intermediate-frequency amplification using a variable-mu valve; a triode is used as the second detector and a power pentode in the output stage.

A SOLUTION OF THE SUPERHETERODYNE TRACKING PROBLEM [MATHEMATICAL DETERMINATION OF THE OSCILLATOR INDUCTANCE AND FIXED SERIES CONDENSER].—V. D. Landon and E. A. Sveen. (*Electronics*, Aug., 1932, pp. 250–251.)

OSCILLATOR FOR GANGING.—(*Wireless World*, 2nd September, 1932, Vol. 31, pp. 224–226.)

An article for the amateur constructor in which is described a simple oscillator for ganging superheterodyne and straight receivers.

SINGLE VALVE FREQUENCY CHANGERS [AND THE USE OF THE PENTODE].—W. T. Cocking. (*Wireless World*, 29th July and 5th August, 1932, Vol. 31, pp. 74–75 and 110–111.)

The author discusses in full the relative merits and demerits of the screen-grid valve as a frequency changer in a supersonic heterodyne receiver, and explains why it is unsuitable for use in this country where long wave reception has to be catered for. The ordinary bi-grid valve is then similarly dealt with and its low efficiency pointed out. Finally, reasons are given why the pentode valve is so greatly superior to other forms of single-valve frequency changer and fully equal to the conventional two-valve arrangement.

GRID BIAS FROM ANODE CURRENT: SOME NECESSARY PRECAUTIONS [TO AVOID EFFECTS DUE TO A.F. COMPONENT IN ADDED RESISTANCE].—F. J. A. Pound. (*Wireless Engineer*, August, 1932, Vol. 9, No. 107, pp. 445–446.)

DAS PROBLEM DES RÖHRENLOSEN FADING-REGLERS ENDGÜLTIG GELÖST (The Problem of Automatic Volume Control without Auxiliary Valve finally Solved).—E. Rossman. (*Die Sendung*, 8th July, 1932, Vol. 9, No. 28, pp. 601–602.)

VOLUME CONTROL IN SCREEN-GRID VALVE RECEIVERS.—W. Nikolaus. (*Die Sendung*, 10th June, 1932, Vol. 9, No. 24, pp. 510–511.)

AUTOMATIC VOLUME CONTROL AND ANTI-FADING DEVICE.—(French Pat. 722 297, Bedeau and de Mare, Soc. Ducretet, pub. 15th March, 1932: long summary in *Rev. Gén. de l'Élec.*, 25th June, 1932, Vol. 31, p. 209 D.)

Using the variation of p.d. across a resistance, produced by the d.c. component of the detector anode current, to vary the screen-grid potential of a s.g. valve or valves, by the intermediation of a "corrector" triode which reverses the sign of the variation. Thus a decrease of signal strength increases the amplification of the s.g. valve or valves, and conversely.

AUTOMATIC GAIN CONTROL [AND THE WUNDERLICH DOUBLE-GRID VALVE].—A. Dinsdale. (*Wireless World*, 23rd and 30th September, 1932, Vol. 31, pp. 290–292 and 327–328.)

Automatic volume control has so far found little favour among British designers. Things are greatly different in America, however, where it is found in practically every modern receiver in addition to the ordinary manual volume control. The writer deals with the three principal methods adopted in the latest American sets, paying particular attention to the method employing the Wunderlich double-grid valve specially developed for the purpose (July Abstracts, p. 409.) *See* also next abstract.

AUTOMATIC VOLUME CONTROL—IS IT WORTH WHILE?—W. T. Cocking. (*Wireless World*, 12th August, 1932, Vol. 31, pp. 116–118.)

The two main methods of achieving volume control are discussed, with the advantages and disadvantages of each. The advantages of the latest type of valve, which has recently been produced in America solely for this purpose, are also stressed.

AUTOMATIC VOLUME CONTROL [RESISTOR BETWEEN DETECTOR CATHODE AND NEGATIVE TERMINAL OF COMMON SOURCE OF PLATE SUPPLY, WITH TAPPING TO SCREEN GRID OF R.F. VALVE].—(Patent summary in *Electronics*, Aug. 1932, p. 273: Sateren.)

CURRENT LIMITING SYSTEMS.—(Patent summaries in *Electronics*, Aug. 1932, p. 273: Francis, Bishop.)

(1) The grid leak of an amplifier tube consists of the primary of a transformer in whose secondary circuit is an element which becomes highly conductive when a pre-determined voltage is applied to it, this voltage being obtained by rectifying a portion of the input energy.

(2) A method of impressing across the input of an amplifier an out-of-phase voltage when the output increases beyond a desired point.

GERMAN TESTING SETS FOR RADIO SERVICING.—(*Hochf:tech. u. Elek:akus.*, Aug., 1932, Vol. 40, No. 2, pp. 75–76.)

STÖRUNGEN BEIM RADIO-EMPFANG ([MAN-MADE] INTERFERENCE IN RADIO RECEPTION).—J. W. Alexander. (*Hochf:tech. u. Elek:akus.*, Sept., 1932, Vol. 40, No. 3, pp. 82–88.)

German version of the Dutch paper dealt with in September Abstracts, p. 524.

ANALYSIS AND REDUCTION OF OUTPUT DISTURBANCES RESULTING FROM THE ALTERNATING CURRENT OPERATION OF THE HEATERS OF INDIRECTLY HEATED CATHODE TRIODES.—J. O. McNally. (*Proc. Inst. Rad. Eng.*, Aug., 1932, Vol. 20, pp. 1263–1283.)

Author's summary:—This paper discusses the disturbance currents in the output circuits of indirectly heated cathode triodes, introduced by the use of alternating current in the heaters. It indicates that the disturbance currents are introduced into the output circuit by (1) the electric field of the heater, (2) the magnetic field of the heater current, and (3) the resistance between heater and grid and between heater and plate, and the capacitance between heater and grid and heater

and plate.

The outputs due to the electric field between cathode and plate are produced by the "grid" action of the heater and heater leads. The frequency of the output is chiefly that of the heater supply. The outputs are shown to be effectively reduced by electrostatically shielding the heater.

Disturbance currents of the frequency of the heater supply, and of double this frequency, are shown to be produced by the magnetic field. The double-frequency component is shown experimentally to be proportional to the square of the heater current. The following means of reducing the magnetic field are discussed :—(1) the adoption of a heater geometry which produces a smaller field in the space between the cathode and the plate, (2) the use of a magnetic shield around the heater system, and (3) the use of a lower current, higher voltage heater.

The ways in which disturbance currents are introduced by leakage resistances and capacitances between heater and grid and heater and plate are indicated, and experimental verification is given for the case of resistance between the grid and heater.

Use has been made of this disturbance current analysis in the development of an extremely low disturbance output tube, which is described.

MICROPHONIC FEED-BACK PHENOMENA.—H. A. Brooke. (*Wireless World*, 5th August, 1932, Vol. 31, p. 98.)

RADIO INTERFERENCE [FROM ELECTRICAL APPARATUS AND LINES]: ITS CAUSES AND ELIMINATION.—J. McCandless. (*Electrician*, 12th Aug., 1932, Vol. 109, pp. 198–199.)

RADIO INTERFERENCE PROBLEMS [IN CALIFORNIA].—C. C. Campbell and H. N. Kalb. (Summary in *Sci. Abstracts, Sec. B*, Aug., 1932, Vol. 35, No. 416, pp. 476–477.)

INTERFERENCE PREVENTION FOR STREET CARS [TRAMS, ETC., WITH OVERHEAD WIRES].—Hermle. (Summary in *Electronics*, Aug., 1932, p. 269.)

GERMAN SHIELDED DOWN-LEADS.—(*See* under "Aerials and Aerial Systems.")

NEW DEVELOPMENT IN TUNING COILS ["FERROCART" CORES].—Hans Vogt. (*Wireless World*, 16th September, 1932, Vol. 31, pp. 272–273 and 271.)

By the use of a solid core containing finely divided high-permeability metal, it has been found possible to construct miniature tuning inductances rivalling in efficiency those of the air-core type on 3-inch formers.

THE MAGNETIC SUSCEPTIBILITY OF IRON POWDER COMPOSITIONS, AND ITS DEPENDENCE ON PARTICLE SIZE AND SEPARATION.—E. Gerold. (*Archiv f. Elektrot.*, No. 3, Vol. 26, 1932, pp. 168–176.)

POLICE WIRELESS [POCKET RECEIVER AND CALLING DEVICE].—(*Wireless World*, 9th September, 1932, Vol. 31, p. 268.)

A brief description of a pocket receiver with calling device. The instrument is intended to be carried in one of the breast pockets of a police constable's tunic. A single valve, connected in a special feed-back circuit, is employed. The real innovation is the calling device, which is contained in a separate unit intended to be carried in the other breast pocket.

AERIALS AND AERIAL SYSTEMS.

DIE STRAHLUNGSENERGIE DER DIPOLANTENNE MIT REFLEKTOR (The Radiation Energy of the Dipole Aerial with Reflector).—J. Labus. (*E.N.T.*, Aug., 1932, Vol. 9, pp. 319–322.)

Further development of the work dealt with in May and June Abstracts, pp. 285 and 347. The effect of the addition of a separately excited reflector system, similar to the aerial system, is here examined, on the assumption of equality in corresponding aerial and reflector currents; the field strength in the one direction is doubled, in the opposite direction is entirely suppressed, and the total radiation energy is double that of the aerial without reflector.

A RECIPROCAL THEOREM IN THE THEORY OF DIFFRACTION [APPLICATION TO THEORY OF LOUD SPEAKERS AND AERIAL ARRAYS].—Smith. (*See* under "Acoustics and Audio-frequencies.")

DIRECTIVE AERIAL SYSTEM WITH GROUPS OF VARYING EFFECTIVE HEIGHT.—(Patent summary in *Electronics*, Aug., 1932, p. 274: Bouthillon.)

BEMERKUNGEN ZU EINER ARBEIT VON KARL F. LINDMAN: "ÜBER DIE ELEKTRISCHEN EIGENSCHWINGUNGEN STABFÖRMIGER LEITER" (Remarks on a Paper of K. F. Lindman: "On the Free Electrical Oscillations of Rod-Shaped Conductors").—E. Hallén. (*Ann. der Physik*, 1932, Series 5, Vol. 14, No. 5, pp. 586–588.)

For reference to Lindman's paper *see* August Abstracts, p. 461; also June, p. 347.

REDUCING FADING BY ALTERNATELY CONNECTING POWER AMPLIFIER TO VERTICAL AERIAL AND HORIZONTAL DIPOLE.—(Patent summary in *Electronics*, Aug., 1932, p. 274: Young.)

THE ACTION OF SHORT-WAVE FRAME AERIALS.—L. S. Palmer and L. L. K. Honeyball. (*Proc. Inst. Rad. Eng.*, Aug., 1932, Vol. 20, pp. 1345–1367.)

Covering the same ground as the *Proc. Roy. Soc.* paper dealt with in September Abstracts, p. 526. A short appendix is added describing a mechanical graph for solving the transcendental equations which determine the "formatising" conditions.

GERMAN SHIELDED DOWN-LEADS.—(*Electronics*, Aug., 1932, p. 266.)

Editorial paragraph on the attention given to this subject in Germany. In one type of lead the conductor is held clear of the sheathing by paper cords wrapped in loose spirals around it, so that the separation is chiefly air; in another, this separation is of cotton-wool; in a third, a rubber tube with external metallic sheathing has within it radial partitions to hold the conductor central. Another system uses a double lead, coupled inductively to the

aerial above and to the receiver below, thus reducing the need for very small capacities between lead and sheathing. " These shielded leads have been strongly (perhaps too strongly) recommended by the power companies in Germany recently." *Cf.* September Abstracts, p. 527–two.

MUTUAL IMPEDANCE OF GROUNDED WIRES ABOVE THE SURFACE OF THE EARTH.—R. M. Foster. (*Phys. Review*, 15th Aug., 1932, Series 2, Vol. 41, No. 4, pp. 536–537.)

" A formula already established for the mutual impedance of any grounded thin wires lying on the surface of the earth (February Abstracts, p. 114) has now been extended to include wires lying in horizontal planes above the surface and grounded by vertical wires at their four end-points." The extended formula is given.

VALVES AND THERMIONICS.

DIE PENTHODE IM ENDVERSTÄRKER (The Pentode in the Output Stage [and the Use of a Frequency Filter to prevent Non-Linear Distortion of the Higher Frequencies and to improve the Sound Pressure Characteristic]).—P. Cornelius. (*E.T.Z.*, 25th Aug., 1932, Vol. 53, No. 34, pp. 819–821.)

Author's summary:—" The use of the pentode in the output stage for audio-frequencies meets with practical difficulties in spite of great theoretical advantages, since either the reproduction is not free from distortion or else the output power falls far below the value theoretically attainable. The bad reproduction is here traced, contrary to the usual explanation [excessive amplification of the higher frequencies], to non-linear distortion of the higher frequencies [above 300–500 c/s]. The conditions derived from this point of view, and the method of correct design of a pentode output stage, are given. It is shown that the ordinary method of measuring the merit of an output stage [plotting the frequency characteristic with purely ohmic load and simultaneously measuring the distortion factor—' klirr ' factor] is not applicable to the pentode."

The conditions referred to above are the two usual ones which apply also to triodes—namely, no momentary excess of positive potential on the grid over that on the cathode, and no over-control of the anode current into the bent part of the characteristic—together with a third " whose non-observance has hitherto checked the proper use of the pentode." This depends on the bending of the anode curve *as the anode potential decreases*. The value of anode potential at which this bend begins is, for a given pentode, practically independent of the control-grid potential, but it is dependent on the screen-grid potential (Fig. 4) and can be lowered by decreasing this. Figs. 5 and 6 show how the non-observance of the third condition causes distortion and spoils the reproduction of the higher frequencies, for which the loud speaker load impedance is higher and the anode a.c. potentials greater.

The erroneous interpretation of the observed effects as the result of excessive output at the higher frequencies has led to attempts at a cure by over-matching the load resistance (increasing it in comparison with the valve resistance). This is shown to be unsound (Figs. 7 and 8). With an output transformer ratio of 130 : 1 complete over-control sets in for a grid a.c. potential of 14.5 v (power to loud speaker 0.34 w), whereas with a ratio of 50 : 1 the distortion threshold is only reached at $V_g = 19.0$ v (corresponding power 1.23 w). The true solution lies in an appreciation of the real causes of the trouble and also of the fundamental fact that what is wanted is *not* that a constant a.c. input shall provide, at all frequencies, constant alternating currents through the loud speaker, but that it shall provide constant sound pressures from the loud speaker ; *the solution, therefore, lies in the use of a properly designed frequency filter in front of the pentode* (Fig. 10) which not only prevents the non-linear distortion of the higher frequencies, but also improves the sound-pressure curve of the pentode-amplifier, dynamic loud speaker combination. As regards the low frequencies, the mechanical resonance of the loud speaker can be damped by mechanical means.

PENTODE WITH SECOND SCREEN GRID REPLACING USUAL OUTER GRID.—(Summary of German Patent in *Electronics*, August, 1932, p. 269.)

" By proper transformer design the electric field between the two screen grids remains practically constant with varying anode current."

RECENT TRENDS IN RECEIVING TUBE DESIGN.—J. C. Warner, E. W. Ritter and D. F. Schmit. (*Proc. Inst. Rad. Eng.*, Aug., 1932, Vol. 20, pp. 1247–1262.)

Authors' summary :—This paper gives a brief summary of the important steps in receiving tube design over the past ten years. The significance of new forms of grids and in particular the suppressor grid are discussed. Characteristics of new radio-frequency tubes containing suppressor grids are shown. Improvements in cathode and grid designs are illustrated by the characteristics of a new triode as well as two triple-grid tubes. A new tube for class B audio amplification is described together with a mercury vapour rectifier for supplying power to the class B amplifier.

DEVELOPMENT OF VALVES IN GERMANY.—Urtel. (Summary in *Electronics*, Aug., 1932, p. 269.)

" The tendency towards increased ' Güte ' [$\mu \times$ mutual conductance] is discussed, but it is considered that further progress in this direction is unlikely. . . . Recent development has been towards higher mutual conductances (7 and 8 mA/v) but it has proved difficult to turn out such tubes in quantity within tolerances narrow enough to allow of their use in commercial receivers. Indirectly heated pentodes are considered of importance, in view of the better constants and freedom from hum attainable. The development of tubes suitable for both a.c. and d.c. (*e.g.* with 20-volt filaments) is specially discussed."

TECHNICAL DATA ON NEW TUBES [HEATER-TYPE POWER PENTODE 43, DOUBLE-DIODE TRIODES 55 AND 85, TRIPLE-GRID POWER AMPLIFER 89, AND HEAVY-DUTY FULL-WAVE RECTIFIER 83].—(*Electronics*, Aug., 1932, p. 252.)

A VALVE WITH SUDDEN FALL OF EMISSION AT END OF LIFE.—(Patent summary in *Electronics*, Aug., 1932, p. 274 : Kelly.)

AN ELECTROMETER TRIODE.—Curtiss: Leprince-Ringuet. (*See* abstract under "Subsidiary Apparatus and Materials.")

MULTIPLE VALVES FOR SEMI-APERIODIC R.F. AMPLIFICATION OF ULTRA-SHORT WAVES. —von Ardenne: Loewe Company. (*See* abstract under "Reception.")

THE UPPER FREQUENCY LIMIT OF OSCILLATOR VALVES [THEORETICAL TREATMENT].—C. Matteini. (Summary in *Sci. Abstracts, Sec. B.*, Aug., 1932, Vol. 35, No. 416, p. 487.)

For the generation of extremely high frequencies the amplification should be high and the internal resistance low (*cf.* and contrast conditions for stability of frequency, June Abstracts, p. 342) even if this leads to an increase of capacity between the electrodes. The tendency has been to use oxide-coated and thorium filaments instead of pure tungsten, but the undesirability of over-heating the other electrodes has limited the use of oxide-coated filaments to valves of capacity below 2 kw, and of thorium to below 50 w.

TRANSMITTING VALVE FOR ULTRA-SHORT WAVES. —Telefunken Company. (*Electronics*, Aug., 1932, p. 268.)

Another reference (from *Funk, Berlin*) to the valve dealt with in August Abstracts, p. 463.

THE APPARENT CONDUCTIVITY OF OXIDE COATINGS USED ON EMITTING FILAMENTS.—R. H. Fowler and A. H. Wilson. (*Proc. Roy. Soc.*, Sept., 1932, Vol. 137, No. A 833, pp. 503–511.)

Authors'. summary:—Recent experiments have established peculiar forms for the electrical conductivity of an oxide coating as applied to a metal wire to make it a good low-temperature thermionic emitter. The current flowing has been studied as a function of voltage and temperature. By applying Wilson's theory of semi-conductors and rectifying contacts, and Gurney's theory of electrolytic conduction, it is possible to give a satisfactory analysis of the observations and to conclude that the current is a mixed one, mainly electronic at high temperatures, mainly electrolytic at low. The marked resemblances between the behaviour of the conduction current as a function of voltage and temperature and the behaviour of the thermionic emission, and one of the outstanding difficulties of thermionic theory, are commented on.

ON MICROPYROMETRY, ESPECIALLY ON AN OBJECTIVE MICROPYROMETER [FOR TEMPERATURE MEASUREMENTS ON FILAMENTS, ETC.].—G. Lewin, W. W. Loebe and C. Samson. (*Zeitschr. f. tech. Phys.*, No. 9, Vol. 13, 1932, pp. 415–420.)

SHOT EFFECT AND THERMAL NOISE IN THE PHOTO-CELL AMPLIFIER.—von Orbán. (*See* under "Phototelegraphy and Television.")

DIRECTIONAL WIRELESS.

RADIO-COMPAS STROBOSCOPIQUE À LECTURE DIRECTE (Direct-Reading Stroboscopic Radio Direction Finder).—R. Hardy and Bertrand-Lepaute. (*Comptes Rendus*, 5th Sept., 1932, Vol. 195, pp. 518–521.)

A vertical frame aerial (or two at right angles) is rotated at about 600 r.p.m. about its vertical axis. The frame aerial current has an adjustable vertical aerial current superposed on it. The amplifier (direct or frequency-change) is arranged so that the detector is saturated whenever the frame current is appreciable. Thus the rotation of the frame yields as a result of detection a flat current curve made up of alternate wide and narrow plateaus (representing the cardioid diagram) separated by narrow, deep chasms. This current, amplified at low frequency by transformer-coupled stages, gives a potential output in which the only departures from the zero line are high, sharp peaks each representing a potential of about 150 volts. These peaks are separated by alternate short and long gaps (the interval between two gaps of the same type being 1/10 sec.) and are used to give short flashes of light from two neon tubes mounted behind a perforated rotating disc, with an angle of 170° between them. This disc rotates behind a graduated glass dial and is driven by a small motor synchronised with the rotating frame. Exact correspondence between the frame aerial and the "indicator" (or indicators, for several of these can be worked off the one system) is ensured by the production of an "artificial zero" at each frame revolution, in the form of a momentary flash due to an amplified pulse of current generated by an electro-magnetic device attached to the frame. The glass dial is adjusted till its zero coincides with this artificial zero.

The effect of incoming signals is as follows:—if the vertical aerial is disconnected, the two minimum positions of the rotating frame give four flashes per turn, at 0°, 10°, 180° and 190°. On introducing and regulating the vertical aerial current, two of these images approach each other and finally merge, while the other two separate: the result is that three images are seen in the form of an inverted Y, whose leg indicates the exact position of the transmitting station.

NEUERE ARBEITEN AUF DEM FUNKBAKEN-GEBIETE (New Developments in Radio Beacons [Visual Reception, and the Use of Ultra-Short Waves]).—E. Kramar: Lorenz Company. (*Hochf:tech. u. Elek:akus.*, Sept., 1932, Vol. 40, No. 3, pp. 88–92.)

After a short historical survey the writer deals first with the Lorenz Company's beacon, with its magnetic-bias method of transmitting the interlocking signals. If the keying is carried out slowly enough for the receiver to use a d.c. indicating instrument, the course sharpness is greatly increased (to a value of 0.3–0.5 degree at 50 km; an even greater sharpness—at the cost of decreased field strength—can be obtained by altering the angle of the goniometer coils). He then describes three new methods of visual indication, as follows. They all enable heterodyne reception to be used.

(1) The magnetic-bias keying method referred to above (in which two iron-cored chokes are used, one of which is biased so as to work in a saturated condition) has the property not only of automatically producing the complementary signal (of an interlocking pair) by the keying of one of the pair, but also of producing in one circuit the modulation curve complementary to that of the other circuit. Thus by modulation with a saw-tooth wave (of frequency 10–20 per second) two

sets of signals are transmitted, those from one loop aerial having a slow rise and sharp fall and those from the other a sharp rise and slow fall. By heterodyne reception and the use of a suitable rectifier and l.f. arrangement in push-pull, these complementary signals are made to influence a differential pointer instrument, the direction of whose indication shows the preponderance of one set of signals over the other. Fig. 6 shows that the four equi-signal courses, on this system, are not all similar: two (diametrically opposite) are due to the sum, the other two to the difference, of the two sets of signals.

The second system is illustrated in Figs. 7, 8 and 9. A succession of dots (represented by short square-topped waves spaced about three times their own length) is seen by Fourier analysis to be characterised by a fundamental frequency and an in-phase first harmonic of about the same amplitude. A succession of dashes, on the other hand, differs by having the first harmonic displaced by 180°. This fact is made use of by employing two reeds, tuned to the fundamental and harmonic respectively, each carrying a small perforated screen interposed between a light source and a ground glass screen. The series of dots and the series of dashes are used as the complementary signals from the two loops.

The third system also uses the dots and dashes series, but receives them by the differential valve circuit (Fig. 5*a*) employed in the saw-tooth modulation system described above; care being taken (by suitable matching) that the demodulated voltage curve is transmitted over the second transformer correct as to phase.

The paper ends with a short section on the use of ultra-short waves for radio beacons. If the ordinary arrangement is imitated by crossed horizontal dipoles, excellent sharpness of course is obtained, but reception also has to be on a horizontal dipole and the directional properties of this interferes with the practical results. Transmission with vertical polarisation is therefore used, and Fig. 11*b* shows how the keying of two feeders is avoided by the employment of only one transmitting vertical dipole, flanked by two reflecting dipoles radiation-coupled to it. These reflectors are keyed alternately by relays which break them at their middle points, thus producing in turn the radiation diagram of Fig. 11*a* and its reverse. An equi-signal zone is thus generated in a direction perpendicular to the line joining the three dipoles.

EQUI-SIGNAL BEACON ON LORRY.—C. J. Madsen. (*Electric Journ.*, March, 1932, Vol. 29, pp. 114–117.)

Developed by the Westinghouse Company. Collapsible 8-ft. loops are used, and the power is supplied by a 10-h.p. petrol engine. A range of 20 miles to the standard receiver has been obtained.

RADIO DIRECTION FINDING EXPERIMENTS WITH AURORA.—B. Düll. (Summary in *Electronics*, Aug., 1932, p. 268.)

Bearings were taken every 30 seconds by night on Stockholm (435 m) at a point where daytime signals are practically inaudible. Signal strength also was recorded. Very rapid variations of bearing and strength occurred previous to the appearance of aurora, with practically constant earth magnetic field; as soon as the aurora began, the volume fell to a very low figure and the bearings became steady, the earth field showing rapid variations. This applied to strong, wavering, green, *S*-form lights; the weaker, whitish or violet, filmy lights gave a very good and consistent volume and very steady bearings. *See* also next abstract.

ÜBER DIE URSACHEN DER NÄCHTLICHEN FUNKPEIL-SCHWANKUNGEN (The Causes of Night Errors in Direction Finding).—B. Düll. (*E.N.T.*, Aug., 1932, Vol. 9, pp. 308–318.)

The writer's observations at Küstrin on Langenberg, Vienna, Budapesth, Kalundborg and Warsaw, and subsequently at Abisko in Lapland on Stockholm (*see* above abstract), combined with material derived from geophysical and astronomical observatories, lead to the conclusion that there is a close connection between sunspots, terrestrial magnetic disturbances and aurora on the one hand, and the irregular bearing variations occurring during twilight and night on the other hand. This connection is illustrated by a large number of curves. Among these, it is interesting to note that Figs. 5 and 6 show that the relations between night error and magnetic character are similar for a transmitter in the N-S direction and one in the W–E direction.

In section 5 the writer gives his theory, according to which a complete explanation of the observed phenomena is found in the sudden "electro-invasion" (due to increased solar activity) of the earth's atmosphere by electrons, alpha particles and photoelectrically excited metallic and ash molecules. The beginning of the electro-invasion causes marked inhomogeneities in the Kennelly-Heaviside layer, like smears or flaws in optics, which produce violent fluctuations in refraction, polarisation and absorption. In ordinary latitudes this first stage lasts only a few hours, *and in the maximum auroral zones only a few minutes*, since here the increased number—and perhaps also increased velocity—of the charged particles brings about a rapid "filling up" and subsequent homogeneous distribution throughout the layer. The night errors disappear and all that remains is an increased absorption which is greater at the greater heights, so that short waves are more affected by it than long waves. But little by little the ions and electrons penetrate deeper into the atmosphere, so that the medium waves also become affected by the increased absorption. This homogeneous filling of the layer may last only a few hours, up to a maximum of three days: for an electro-invasion of average strength the processes of recombination set in about one day after the invasion. These processes occur in an irregular manner, resulting in the formation of more "smears"; these, unlike their predecessors produced by the invasion itself, may continue their bearing-fluctuation and fading effects for as much as three days.

It frequently happens that the first invasion is supplemented by several others, often spreading—as the magnetic records show—over several days. These, however, do not directly affect direction finding, since the first invasion has already had its effect: *but they may postpone the setting-in of the recombination processes*. The setting-in of the various phases of the whole process described above is displaced in time for the various heights, and

therefore for the various wavelengths; an invasion whose particles have insufficient speed to penetrate to the lowest parts of the layer would leave long-wave transmission unaffected.

The writer ends by pointing out that the course of events resulting from an invasion is affected by the previous history of the layer. Thus after a period of many days free from any invasions the layer acquires a special condition, giving very strong and constant wireless communication and directional errors of the order of one degree only. An invasion then produces effects which follow a special course: thus the night-errors directly following the invasion are very transitory because the poverty of the layer in ions and electrons makes recombination set in very quickly and finish very soon.

ÜBER EIN ELEKTRISCHES VERFAHREN FÜR FLUGPLATZBEGRENZUNGEN ZUR ERLEICHTERUNG VON BLINDLANDUNGEN (An Electrical Method of Indicating the Limits of a Landing Ground, to assist Blind Landings).—H. Gromoll. (*Hochf:tech. u. Elek:akus.*, Aug., 1932, Vol. 40, No. 2, pp. 41–47.)

Using a horizontal ring cable traversed by a current of saw-tooth form and of fundamental frequency 2 500 c/s. The method depends on the phase relations between the vertical components of the outer and inner magnetic fields of a circular current, and on the dependence of the rectification process of a Fourier current on the phases of its harmonics. Fig. 1 shows how the phase-change surface *Ph* divides the outer and inner fields, the phases in which are opposed. The receiver consists essentially of a horizontal frame aerial which is influenced by the vertical component of the magnetic vector, an amplifier, and a push-pull anode-bend rectifier in whose output circuit is a differential milliammeter: an amplitude-limiting device is added to render the indications more uniform.

The amplitude- and phase-relations along the ring cable are so arranged that the transmitting current (fundamental and first harmonic) is represented by equation 2, giving in the receiving frame aerial an induced potential represented by equation 3. This, when it reaches the push-pull rectifier, produces a difference between the rectified currents from the two valves: the sign of this difference-current is dependent on the phase of the input potential. Thus this phase (and with it the decision as to the aeroplane being in the outer or in the inner field) is indicated by the direction of the deflection of the differential milliammeter. By the addition of a vertical frame aerial in the aeroplane the radial direction can also be determined.

The paper includes a discussion of the necessary amplitude- and phase-fidelity of amplification in the receiver, while the final long section describes some laboratory tests on the rectifying and amplitude-limiting circuits. The replacement of the push-pull rectifier by a dry-plate rectifier would entail a special investigation of the latter as regards amplitude- and frequency-dependence, polarity-reversal errors, etc. The possibility of using the ordinary aeroplane receiver as part of the equipment is mentioned.

NEW METHOD FOR DISTANCE FINDING [COMBINATION OF RADIO SIGNAL AND FOG HORN BLASTS]. (*Electronics*, Aug., 1932, p. 260.)

Operating experimentally at the Columbia River Light Station, Oregon. *Cf.* Clyde installation, 1931 Abstracts, p. 43.

LONG-WAVE COMMUNICATION FOR AIRCRAFT.—Eisner. (*See* under "Stations, Design and Operation.")

HOCHFREQUENZTECHNIK IN DER LUFTFAHRT (Wireless Engineering in connection with Aviation).—H. Fassbender and others. (Book reviewed in *Zeitschr. f. tech. Phys.*, No. 9, Vol. 13, 1932, p. 446.)

ACOUSTICS AND AUDIO-FREQUENCIES.

KLANGANALYSE DURCH STEUERUNG DES SÄTTIGUNGSSTROMES EINER ZWEIELEKTRODENRÖHRE (Sound Analysis by the Control of the Saturation Current of a Two-Electrode Valve).—J. Diebitsch and H. Zuhrt. (*E.N.T.*, Aug., 1932, Vol. 9, pp. 293–301.)

A new method of using the exploring-note principle employed by Grützmacher and others. The cathode of a diode is heated by the sum of the current to be analysed and the exploring-note current, while the anode voltage is so high that the valve works, throughout its whole range, in the saturation zone. The quantity of heat produced in the cathode, for a constant resistance of the latter, is proportional to the square of the current passing; over not too large a range, the resistance can be taken as constant and the heat loss as proportional to the temperature. Within this range, therefore, the cathode temperature is proportional to the square of the heating current, provided the changes in this (*i.e.*, the beats) follow each other sufficiently slowly, as is the case when the exploring frequency and the partial frequency are nearly equal. For higher beat frequencies, on the other hand, this does not hold good, and for these frequencies the temperature fluctuations are smoothed out by the thermal inertia of the cathode. Thus there is no need, as there is in the older methods, for special filters to remove the higher frequencies. Another advantage over the older methods is the absence of the need of further amplifying stages: owing to the great amplification given at the lower frequencies, the temperature fluctuations can be measured by the fluctuations of a d.c. meter direct in the anode circuit. If, instead, a loop oscillograph is used, a tuned circuit (Fig. 7*b*) is advisable to aid in the suppression of the effects of the higher frequencies, since the smaller inertia of the oscillograph is liable to make these evident.

Part II deals with the theory of the control of emission, including possible errors; part III describes the practical application and some results. At the end of part I the writer points out that the employment of the saturation current is not essential: the brightness fluctuations of the filament can be used as indications, with the aid of a photocell arrangement. But for this purpose no diode is necessary; a simple incandescent bulb used in this way forms a serviceable analyser, needing no filters and no amplifier.

SOUND ANALYSIS BY USE OF BRIGHTNESS FLUCTUATIONS OF AN INCANDESCENT BULB FILAMENT, REGISTERED BY A PHOTOELECTRIC CELL.—Diebitsch and Zuhrt. (*See* end of above abstract.)

AUDIO-FREQUENCY DISTORTION MEASUREMENTS [GRÜTZMACHER ANALYSER: FAILURE OF "KLIRRFACTOR" TO GIVE DISTORTION AS HEARD BY EAR: ANOTHER METHOD GIVING COMBINATION TONES THROUGHOUT ENTIRE AUDIBLE RANGE].—Hoffmann. (Summary in *Electronics*, Aug. 1932, p. 268.)

The "newer method" uses as input two a.f. tones differing by (*e.g.*) 50 c/s; at the output end a filter passing 50 c/s is followed by the measuring or recording instrument. "To what extent such measurements give a truer indication of the distortion as perceived aurally is as yet doubtful." The paper mentions, as a source of sinusoidal currents, the "condenser siren" in which a toothed wheel is rotated within (but clearing) a second toothed wheel.

THE USE OF THE RECTIFIER BRIDGE IN TEST ROOM TECHNIQUE [AS PHASE-SENSITIVE INDICATOR, FREQUENCY ANALYSER, ETC.].—Walter. (*See* under "Measurements and Standards.")

ÜBER EINEN NEUEN SCHALLDRUCKGLEICHRICHTER (A New Sound Pressure Rectifier [for the Direct Measurement of Sound Pressures of 50–8 000 Bars]).—F. Ribbentrop. (*Zeitschr. f. tech. Phys.*, No. 9, Vol. 13, 1932, pp. 396–402.)

The principle of the new sound valve here described was originally given by Kundt and used by Eisenhour and Tyzzer (1930 Abstracts, p. 105). By the use of the wing of an ordinary house fly, which had died in its winter sleep, as the moving part of the flap valve, the writer has made a highly efficient and satisfactory device which in conjunction with a liquid manometer has many applications in acoustic measurements. By the employment of "full-wave rectification" (with two such valves) an almost doubled sensitivity is obtained, and no air is removed from the sound field. The construction, calibration, frequency-dependence and various applications of the instrument are discussed.

ÜBER DIE BESTIMMUNG DES WIRKUNGSGRADES VON LAUTSPRECHERN (The Determination of the Efficiency of Loud Speakers [by a purely Acoustic Method]).—W. Heimann. (*E.N.T.*, Aug., 1932, Vol. 9, pp. 302–308.)

After discussing the methods, acoustic and electrical, used by other workers, the writer describes the purely acoustic procedure finally adopted in the AEG laboratories. Two mica Rayleigh discs are worked out theoretically and the results confirmed by tests with a calibrated diaphragm. A condenser microphone is calibrated against one Rayleigh disc, and then used to measure the sound field, in the open air, of several loud speakers, using a point-by-point procedure over one quadrant. The oud speaker is arranged horizontally on the ground, so that it radiates upwards with the ground acting as an infinite rigid wall extending its baffle. By integrating the values thus obtained the acoustic output is found, and hence the efficiency. Electrodynamic loud speakers give values from 1–6%, electromagnetic from 0.3–2%, the testing frequencies ranging from 120 to 5 000 c/s.

A RECIPROCAL THEOREM IN THE THEORY OF DIFFRACTION [APPLICATION TO THEORY OF LOUD SPEAKERS AND AERIAL ARRAYS].—F. D. Smith. (*Phil. Mag.*, July, 1932, Series 7, Vol. 14, No. 89, pp. 66–78.)

This paper gives a general theorem which should make it possible to infer the current distribution in an aerial array or the mode of vibration of a loud speaker from the measured angular distribution of radiation. Some illustrative cases are worked out.

SOUND DIFFRACTION BY RIGID CIRCULAR PLATE, SQUARE PLATE AND SEMI-INFINITE SCREEN.—L. J. Sivian and H. T. O'Neil. (*Journ. Acoust. Soc. America*, April, 1932, Vol. 3, pp. 483–510; *Bell Tel. System Monograph B–677*.)

"Experimental data for circular and square plates with approximate theory for certain cases; numerical evaluation of the semi-infinite screen theory."

DYNAMIC SPEAKER DESIGN—PART II.—A. R. Barfield. (*Electronics*, Aug., 1932, pp. 257–259.)

Conclusion of the paper dealt with in August Abstracts, p. 464.

THE IMPORTANCE OF THE MAGNETIC BIAS IN ELECTROMAGNETIC TELEPHONES [AND LOUD SPEAKERS].—L. Draub. (*E.T.Z.*, 18th Aug., 1932, Vol. 53, No. 33, pp. 793–795.)

NEW DUAL LOUD SPEAKER.—H. A. Hartley. (*Wireless World*, 5th August, 1932, Vol. 31, pp. 99–101.)

Practical details are here given of dual speaker equipment combining the excellent high-note response of the electrostatic speaker with the full-bass reproduction of the moving-coil type.

TWO SPEAKERS FROM ONE SET.—(*Wireless World*, 23rd September, 1932, Vol. 31, pp. 298–300.)

It is becoming increasingly common practice to operate two or more loud speakers from one set. Under such conditions if one loud speaker is withdrawn from circuit the output from the others will be increased, and a certain amount of distortion will be introduced. The article deals with methods which can be adopted to compensate for this.

A DIRECT METHOD OF MEASURING THE VELOCITY OF SOUND IN PAPER.—D. A. Oliver. (*Phil. Mag.*, Aug., 1932, Series 7, Vol. 14, No. 90, pp. 318–328.)

DIAGONAL SYMMETRY IN CHLADNI PLATES.—R. C. Colwell. (*Phys. Review*, 15th June, 1932, Series 2, Vol. 40, No. 6, p. 1026.)

Abstract only. *See* also July Abstracts, p. 414—two.

TRANSVERSE VIBRATIONS OF AN ANNULAR PLATE OF VARIABLE THICKNESS.—J. Ghosh. (Short summary in *Sci. Abstracts, Sec. A*, July, 1932, Vol. 35, No. 415, p. 633.)

THE VIBRATIONS OF RODS AND PLATES.—R. C. Colwell. (*Journ. Franklin Inst.*, Aug., 1932, Vol. 214, No. 2, pp. 199–213.)

This paper contains calculations and diagrams of the nodal lines of a square plate, and photographic

reproductions of various vibrations excited with the electrical oscillator.

THE PENTODE IN THE OUTPUT STAGE [AND THE USE OF A FREQUENCY FILTER TO PREVENT NON-LINEAR DISTORTION OF THE HIGHER FREQUENCIES AND TO IMPROVE THE SOUND PRESSURE CHARACTERISTIC].—Cornelius. (*See* under "Valves and Thermionics.")

DIE ENTWICKLUNG DES TONFILM-LAUTSPRECHERS (The Development of the Loud Speaker for Sound Films).—H. Warncke. (*Kinotechnik*, No. 9, Vol. 14, 1932, pp. 171–175.)

LEISTUNGSMESSUNG AN VERSTÄRKERN (The Measurement of Power in Amplifiers [the Burstyn "Audimeter" for Sound Film Apparatus]).—P. Hatschek: Burstyn. (Summary in *Elektrot. u. Masch:bau*, 7th Aug., 1932, Vol. 50, pp. 448–449.)

THE PRINCIPLES OF THE LIGHT VALVE.—T. E. Shea, W. Herriott and W. R. Goehner. (*Journ. Soc. Motion Picture Eng.*, June, 1932, Vol. 18, pp. 697–730: *Bell Tel. System Monograph B*-675.)

"A discussion of the engineering factors in the design and use of light valves and a description of an improved type."

THE RECORDING OF SOUND AND ITS USE IN BROADCASTING [PARTICULARLY THE HUGUENARD SYSTEM OF INSCRIPTION ON CELLULOID].—Huguenard. (Summary in *Rev. Gén. de l'Élec.*, 30th July, 1932, Vol. 32, p. 36 D.)

Cf. 1931 Abstracts, p. 390.

DEVELOPMENT AND USE OF TALKING MOTION PICTURES [GENERAL DESCRIPTION].—H. M. Wilcox. (*Journ. Franklin Inst.*, Aug., 1932, Vol. 214, No. 2, pp. 137–153.)

SOUND FILMS AND TELEVISION IN RUSSIA.—G. E. Roth. (*Funk-Magazin*, June, 1932, Vol. 5, pp. 455–458.)

RHYTHMOGRAFIE — EIN NEUES TONFILMPRODUKTIONSVERFAHREN (Rhythmography—a New Sound-Film Production Process [rendering into Foreign Speech]).—H. Dillge: Blum. (*Fernsehen u. Tonfilm*, July, 1932, Vol. 3, No. 3, pp. 168–170.) *See* also 1931 Abstracts, p. 273–Gradenwitz.

ÜBER DIE VERWENDUNG VON AKUSTISCHEN FILTERN ALS LÄRMDAMPFER (On the Use of Acoustic Filters as Noise Absorbers).—K. Schuster and M. Kipnis. (*Ann. der Physik*, 1932, Series 5, Vol. 14, No. 1, pp. 123–128.)

THE SOUND SPECTRA OF MUSICAL INSTRUMENTS.—E. Meyer and G. Buchmann. (Summary in *Physik. Ber.*, 16th Aug., 1932, Vol. 13, No. 16, p. 1480.)

A fuller paper on the investigations dealt with in March Abstracts, p. 172.

HIGH FREQUENCIES NECESSARY FOR CORRECT REPRODUCTION OF CERTAIN MUSICAL INSTRUMENTS.—Stokowski. (*Electronics*, Aug., 1932, pp. 260–261.)

Summary of a lecture. Violins and trumpets require a range up to 8.000 c/s, and oboes, pianos, etc., sound unnatural unless the listener can hear tones up to 13 000 c/s. *Cf.* Aug. Abstracts, p. 464.

THE ELECTRICAL MUSICAL INSTRUMENT: THE GENERATION OF VIBRATIONS BY MECHANICAL-ELECTRICAL METHODS.—Vierling. (*Zeitschr. V.D.I.*, 30th July, 1932, Vol. 76, No. 31, pp. 741–745.)

Second part of the survey referred to in September Abstracts, p. 529.

BELL-LESS ELECTRIC CARILLON [AT CAMDEN, N.J.; REED VIBRATIONS AMPLIFIED BY 1 KILOWATT AUDIO-AMPLIFIER].—RCA Victor Company. (*Electronics*, July, 1932, p. 239.)

FREQUENZGANG UND PLATTENBEANSPRUCHUNG VON TONABNEHMERN (Frequency Characteristics and Record-Wear of Gramophone Pick-Ups).—M. Kluge. (*Hochf:tech. u. Elek:akus.*, August and September, 1932, Vol. 40, No. 2, pp. 55–65 and 108–111.)

"Many papers have appeared on the frequency characteristics of electromagnetic pick-ups, using this method [equivalent electrical circuit]. The equivalent circuits of these authors are partly incomplete and partly incorrect. Nowhere is a quantitative experimental confirmation given, nor is there any attempt to do the obvious thing and derive from the equivalent circuit the input resistance of the pick-up—a value of the utmost importance for the merit of the apparatus.

"The present work will show, by the example of an electromagnetic pick-up, that it is difficult, even for the simplest system, to estimate correctly the elements of the equivalent circuit for other frequency zones. For the correct estimation of these elements numerous measurements are necessary. The more exact scheme of a typical pick-up is found in this way and then represented electrically. Measurements on the representation thus obtained are compared with measurements on the actual pick-up: they are found to agree well.

"The practical value of this procedure appears questionable in comparison with the direct measurement of the transmission mass. For pick-ups the particularly interesting thing to know is the input resistance, which determines record-wear. By the use of a general alternating current law (reciprocity theorem) a simple method of direct measurement of this input resistance is obtained, and the result tested on the equivalent circuit with good agreement. The new method is also applied to the input resistance of mechanical gramophones."

In the course of the August instalment, an expression is found for the frequency band of the electromagnetic pick-up, from which it is seen that to obtain a broad band the ratio of total mass to armature mass should be as great as possible, as should also be the ratio of needle rigidity to armature rigidity. The expression does *not* involve the armature resonance frequency: *this has not the influence on the frequency characteristic which is sometimes attributed to it.* A similar incorrect habit is condemned in the section on record-wear: namely the practice of making the free resonance frequency of the armature as high as possible, with the result that many records are destroyed by the lower frequencies: unless indeed these are suppressed as a result of too small a

total pick-up mass.

The September instalment deals with the mechanical gramophone and with the comparative record-wear of mechanical and electrical reproduction. The paper ends by summarising the five most important conclusions affecting the design of an electrical pick-up.

PICK-UP AMPLIFIER VALVE WITH PHOTO-SENSITIVE CATHODE AND EXTERNAL ELECTROSTATIC CONTROL ELECTRODE.—(Patent summary in *Electronics*, Aug., 1932, p. 273: Hund.)

PLANNING THE NBC STUDIOS FOR RADIO CITY.—O. B. Hanson. (*Proc. Inst. Rad. Eng.*, Aug., 1932, Vol. 20, pp. 1296–1309.)

The fundamental principles underlying the design of the lay-out are those dealt with in a previous paper (1931 Abstracts, p. 216). Although steel framework has been avoided in England and Germany, its use cannot be avoided here, but by the complete isolation of each of the 27 studios an attenuation of 100 db or more between studio units can be obtained. "The problems of decoration to obtain proper psychological effect on the performers are being studied at the present time, together with the co-ordinating of this decoration with the acoustical treatment of the studios. . . . In anticipation of television, all of these studios will be electrically shielded and provided with suitable lighting facilities. . . ."

ACOUSTIC PROPERTIES OF GLASS SHEET.—E. Meyer. (Summary in *Physik. Ber.*, 1st Aug., 1932, Vol. 13, No. 15, p. 1393.)

STUDIES ON THE ROOM-ACOUSTICS, PART I [COMPARISON BETWEEN RESULTS WITH SUSTAINED AND IMPULSIVE SOUNDS: THE EQUIVALENT SPHERE REPRESENTING A ROOM].—A. Hirayama. (*Journ. I.E.E. Japan*, May, 1932, Vol. 52 [No. 5], No. 526. English summary, pp. 67–68.)

SCHALLDURCHGANG DURCH KLEINE ÖFFNUNGEN (The Passage of Sound through Small Openings [Badly Closing Doors, Keyholes, etc.]).—E. Wintergerst and W. Knecht. (*Zeitschr. V.D.I.*, 6th Aug., 1932, Vol. 76, No. 32, pp. 777–779.)

A NEW INDUSTRY—MANUFACTURE OF SOUND ABSORBING MATERIALS.—Bureau of Standards. (*Journ. Franklin Inst.*, Sept., 1932, Vol. 214, No. 3, pp. 357–358.)

A note on the connection of the Bureau of Standards with the development of the manufacture of sound absorbing materials.

SOME OF THE FACTORS WHICH AFFECT THE MEASUREMENT OF SOUND ABSORPTION [EFFECT OF ABSORPTION BY MOIST AIR, AND CHOICE OF INITIAL, AVERAGE OR FINAL SLOPE OF DECAY CURVE].—V. L. Chrisler and C. E. Miller. (*Bur. of Stds. Journ. of Res.*, Aug., 1932, Vol. 9, No. 2, pp. 175–185.)

"The total absorption of a room appears to depend [even for frequencies as low as 512 c/s] upon the amount of water vapour present and upon the temperature. The calibration of the room is therefore not definite unless these factors are kept constant. The coefficient of absorption of a sample of material will depend upon whether the initial, average or final slope of the decay curve is used in the calculation. The ear method necessarily employs an average. It may now be recognised that the determination of the sound-absorption coefficient of a material is not as simple a matter as has been hitherto supposed, but appears to depend upon a number of factors which are now beginning to be understood."

THE RELATION OF RELATIVE HUMIDITY TO THE ABSORPTION OF SUPERSONIC WAVES IN VARIOUS MIXTURES OF CO_2.—H. H. Rogers. (*Phys. Review*, 1st Aug., 1932, Series 2, Vol. 41, No. 3, p. 369.)

THE ACOUSTIC RESONATOR INTERFEROMETER: II. ULTRASONIC VELOCITY AND ABSORPTION IN GASES.—J. C. Hubbard. (*Phys. Review*, 15th Aug., 1932, Series 2, Vol. 41, No. 4, pp. 523–535.)

For the first part of this paper *see* March Abstracts, p. 171.

THEORIES OF HEARING.—H. Hartridge. (*Nature*, 30th July, 1932, Vol. 130, pp. 153–156.)

This account of a Royal Institution discourse summarises the evidence for and against the resonance theory and some form of telephone theory of hearing; the conclusion is "that the resonance theory accounts satisfactorily for all the phenomena of hearing, and that no other theory does this."

ÜBER DEN EINFLUSS DER DURCH DEN . . . (On the Influence on the Audition Threshold of Distortion of the Sound Field caused by the Head and Auditory Passages).—G. von Békésy. (*Ann. der Physik*, 1932, Series 5, Vol. 14, No. 1, pp. 51–56.)

THE PHYSICAL NATURE OF JAPANESE VOWELS.—M. Takahashi and G. Yamamoto. (Short summary in *Sci. Abstracts, Sec. A*, July, 1932, Vol. 35, No. 415, p. 634.)

ULTRASONIC ABSORPTION IN GASES.—J. C. Hubbard. (*Phys. Review*, 15th June, 1932, Series 2, Vol. 40, No. 6, p. 1026.)

SUR L'ABSORPTION DU SON DANS LES TUYAUX ET PAVILLONS ACOUSTIQUES (The Absorption of Sound in Acoustic Tubes and Horns).—Y. Rocard. (*Comptes Rendus*, 11th July, 1932, Vol. 195, pp. 112–114.)

ON THE GROUPINGS AND GENERAL BEHAVIOUR OF SOLID PARTICLES UNDER THE INFLUENCE OF AIR VIBRATIONS IN TUBES.—E. N. da C. Andrade. (*Phil. Trans.*, A, No. 692, Vol. 230, 1932, pp. 413–445.)

DIE KURVEN GLEICHER LAUTSTÄRKE (Curves of Equal Sound Strength).—R. Berger. (*Schalltech.*, No. 1, Vol. 5, 1932, pp. 15–16.)

TESTING MOTOR TYRES FOR NOISE.—(*Electronics*, July, 1932, p. 229.)

PHOTOTELEGRAPHY AND TELEVISION.

A RESISTANCE-COUPLED AMPLIFIER FOR TELEVISION [AND THE TRACING AND COMPENSATION OF LOSSES AT THE HIGHER FREQUENCIES].—C. Bradner Brown. (*Electronics*, Aug., 1932, p. 265.)

The chief source of loss was found to lie in the

interelectrode capacities: of these, the filament/grid capacity changed the operation of the amplifier only slightly, and by using s.g. valves the grid/plate capacity was eliminated, leaving the screen-grid/plate capacity as the main source of the loss of the higher frequencies. The decreasing plate coupling impedance, as the frequency increases to 100 kc/s, is seen in a curve, and a diagram shows how this decrease (and the consequent decrease of amplification) can be compensated by the introduction of an inductance L_p of such a value as to equalise the impedance at frequencies above 10 kc/s. "An 8-stage amplifier was compensated with this system using 260 mh chokes laterally wound to reduce distributed capacity. The rising characteristic past 80 000 cycles in such an amplifier was especially valuable owing to the failing [falling?] characteristic of the response of neon lamps in this region."

SERIES MODULATION FOR TELEVISION TRANSMITTERS.—C. Bradner Brown. (*Electronics*, Aug., 1932, p. 263.)

The objections to the Heising modulation system and its adaptations, as regards television, are discussed; the series modulator is then described, its percentage modulation calculated, and its suitability for television pointed out.

TELEVISION APPARATUS [AT THE BRITISH ASSOCIATION MEETING].—Marconi Company. (*Electrician*, 9th Sept., 1932, Vol. 109, p. 311–312.)

"READING" BY TELEVISION [EQUIPMENT FOR TRANSMITTING AND RECORDING SCRIPT OR TYPE].—H. J. Barton Chapple. (*Electrician*, 9th Sept., 1932, Vol. 109, p. 312.)

TRANSMISSION OF COLOUR PICTURES.—(Patent summary in *Electronics*, Aug., 1932, pp. 273–274: Schmook.)

BIBLIOGRAPHY ON TELEVISION [PARTIAL, UP TO 1931].—(*Electronics*, Aug., 1932, p. 265.)

A NEW CATHODE-RAY TUBE WITH SMALL RAY VELOCITY.—Dobke: AEG. (*See* under "Subsidiary Apparatus and Materials.")

INVESTIGATIONS ON GAS-FILLED CATHODE-RAY TUBES.—von Ardenne. (*See* under "Subsidiary Apparatus and Materials.")

A NEW SWEEP-CIRCUIT DEVICE FOR THE CATHODE-RAY OSCILLOGRAPH.—Field. (*See* under "Subsidiary Apparatus and Materials.")

PHOTOGRAPHIC-TYPE FACSIMILE SYSTEM FOR TACTICAL WORK IN CONNECTION WITH NATIONAL DEFENCE.—L. R. Philpott. (*Electric Journ.*, March, 1932, Vol. 29, pp. 133–137.)

TIME-LAG IN PHOTO-CELLS AND THE TOWNSEND DISCHARGE.—N. R. Campbell. (*Phil. Mag.*, Sept., 1932, Series 7, Vol. 14, No. 91, pp. 465–486.)

A continuation of the paper by Campbell and Stoodley in the Joint Discussion of the Physical and Optical Societies referred to in 1931 Abstracts, p. 332. The problem under discussion is "to relate the facts concerning time-lag . . . to the theory of the Townsend discharge." The apparatus used in the investigation is described. The chief results obtained are "(1) the formation of charges on the walls is not the cause of the ordinary time-lag; (2) there is a form of time-lag associated especially with 'thin film' cathodes of low work-function, and probably arising in the production of secondary emission at them; (3) in this time-lag the usual fall in the frequency response curve with increasing applied voltage and magnification is due to an increase in the period of lag rather than in the fraction of the current affected by the lag; (4) this lag is increased by fall of temperature and therefore probably arises in some thermal motion." The theory of the effect is discussed.

SUR LA RÉPONSE D'UNE CELLULE PHOTO-ÉLECTRIQUE À REMPLISSAGE GAZEUX À UN ÉCLAIREMENT BRUSQUE (The Response of a Gas-Filled Photocell to a Sudden Illumination).—P. Fourmarier. (*Comptes Rendus*, 1st Aug., 1932, Vol. 195, pp. 378–380.)

An experimental investigation of lag in cells with cathodes of potassium, sensitised potassium, and caesium, and with fillings of neon, argon and helium. One of the results obtained is that with plane electrodes and an almost uniform field the curve of the instantaneous component of the total current approximately agrees with Townsend's e^{ad} curve for the ionisation by primary electrons. This confirms the writer's hypothesis that the instantaneous component is due to such ionisation, while the second component—the cause of the lag—is due to ionisation by the positive ions of the gas molecules or to the setting-free of secondary electrons from the cathode. Another result is that the employment of a grid, at an intermediate potential, between anode and cathode does not appreciably decrease the lag, at any rate if the grid is of wide mesh. For previous work by the same writer *see* January and April Abstracts, pp. 46 and 233.

THE CAESIUM-OXYGEN-SILVER PHOTOELECTRIC CELL.—C. H. Prescott, Jr., and M. J. Kelly. (*Phys. Review*, 1st Aug., 1932, Series 2, Vol. 41, No. 3, pp. 395–396.)

Abstract only. The characteristics of the spectral response were studied for increasing thicknesses of the caesium surface film.

MANUFACTURE OF CAESIUM SILVER-OXIDE PHOTO-CELLS.—W. H. Nickless. (*Electronics*, Aug., 1932, pp. 255–256.)

THE RESEMBLANCE BETWEEN THE LONGITUDINAL ASYMMETRY OF THE CLASSICAL FIELD OF AN ACCELERATED ELECTRON AND THE DISTRIBUTION OF SCATTERED PHOTO-ELECTRONS.—L. Simons. (*Phil. Mag.*, July, 1932, Series 7, Vol. 14, No. 89, pp. 148–158.)

ERFAHRUNGEN BEI DER EICHUNG VON CADMIUM-ZELLEN (Results obtained in the Calibration of Cadmium [Photoelectric] Cells [for Ultra-Violet Light]).—F. Levi. (Summary in *Physik. Ber.*, 15th July, 1932, Vol. 13, No. 14, p. 1356.)

THE GLOW IN PHOTOELECTRIC CELLS.—Rayleigh. (*Nature*, 3rd Sept., 1932, Vol. 130, pp. 365–366.)

A "Mazda" thin film caesium cell was found to glow, when illuminated by an infra-red beam;

the minimum of luminosity under the conditions of observation was 15.8 volts, and it is probable that it was due to "excitation of the residual gas atoms (argon) by electronic collisions."

UNTERSUCHUNGEN ÜBER . . . (Investigations on the Lower Limit of Sensitivity of Commercial Potassium Cells and Their Suitability for the Photoelectric Measurement of α [Ray]-Preparations).—G. A. Teves. (*Ann. der Physik*, 1932, Series 5, Vol. 14, No. 1, pp. 57–79.)

ZUM MECHANISMUS DES LICHTELEKTRISCHEN PRIMÄRSTROMES IN ISOLIERENDEN KRISTALLEN (On the Mechanism of the Primary Photoelectric Current in Insulating Crystals).—K. Hecht. (*Zeitschr. f. Physik*, 1932, Vol. 77, No. 3/4, pp. 235–245.)

ELEKTRONENBEUGUNG UND . . . (Electron Diffraction and Photoelectric Effect at Alkali Metal Surfaces. Part I. Method of Investigation).—W. Kluge and E. Rupp. (*Zeitschr. f. Physik*, 1932, Vol. 77, No. 1/2, pp. 82–99.)

PHOTOELECTRIC EMISSION FROM DIFFERENT METALS.—H. C. Rentschler, D. E. Henry and K. O. Smith. (*Phys. Review*, 15th June, 1932, Series 2, Vol. 40, No. 6, p. 1045.)

RICHTUNGSVERTEILUNG DER . . . (Directional Distribution of the Electrons Emitted from the Potassium Atom under the Action of Polarised Ultra-Violet Light).—A. Kraus. (*Ann. der Physik*, 1932, Series 5, Vol. 14, No. 1, pp. 103–122.)

ON THE INFLUENCE OF PLASTIC DEFORMATION ON THE INTERNAL PHOTOELECTRIC EFFECT IN ROCK SALT CRYSTALS.—M. N. Podaschewsky. (Summary in *Physik. Ber.*, 15th May, 1932, Vol. 13, No. 10, p. 983.)

ÜBER DIE SPEKTRALE . . . (Spectral Distribution of the Depolarising Current in the Photoelectric Conducting Effect of Rock-Salt under the Action of X-Rays).—N. Kalabuchow and B. Fischelew. (*Zeitschr. f. Physik*, 1932, Vol. 75, No. 3/4, pp. 282–286.)

THE DISTRIBUTION OF ELECTRONS IN THE PHOTO-EFFECT BY RÖNTGEN RAYS, CLASSICALLY TREATED [THEORETICAL INVESTIGATION].—J. Kunz. (*Phys. Review*, 15th July, 1932. Series 2, Vol. 41, No. 2, p. 263.)

[CERTAIN RARE TYPES OF] DIAMONDS YIELD ELECTRICITY WHEN BATHED WITH LIGHT.—(*Sci. News Letter*, 25th June, 1932, p. 405.)

SCHROTEFFEKT UND WÄRMEGERÄUSCH IM PHOTOZELLENVERSTÄRKER (Shot Effect and Thermal Noise in the Photocell Amplifier).—F. von Orbán. (*Zeitschr. f. tech. Phys.*, No. 9, Vol. 13, 1932, pp. 420–424.)

After a short survey of past work on these two causes of background noise, the writer describes his researches on three typical photocells. The cell was connected to an amplifier, then through an adjustable frequency filter to a second amplifier and a valve voltmeter, whose fluctuations represented the effects under investigation (when no current was passed by the photocell, no shot effect could occur, and the meter fluctuations were then due only to thermal agitation in the amplifier). It was found that with decreasing selectivity of amplification, *i.e.*, increasing damping of the combination amplifier–filter-circuit–meter, the pointer fluctuations became smaller. At different filter frequencies and with equal damping they remained at a constant value. These results were investigated by the use of an oscillograph; also by means of a statistical method, in which the frequency-distribution of the peak values of shot effect was estimated by counting the flashes per minute of a glow-discharge lamp in the anode circuit of the output valve.

EINIGE NEUE FESTSTELLUNGEN ÜBER DEN SPERRSCHICHT-PHOTOEFFEKT (Some New Observations on the Barrier-Layer Photoelectric Effect).—F. Waibel and W. Schottky. (*Physik. Zeitschr.*, 1st August, 1932, Vol. 33, No. 15, pp. 583–585.)

Authors' summary:—Copper oxide plates without barrier layer show less than the ten-thousandth part of the spontaneous photoelectric effect of plates with a barrier layer. The part of the barrier-layer photoelectric current which is independent of the voltage, and which has hitherto been regarded as the internal photoelectric effect of the oxide, also vanishes when non-barrier boundary surfaces are used. The experiments lead to the conclusion that forced barrier-layer photoelectric currents exist, of magnitude 100 to 1,000 times the quantum equivalent.

THE BECQUEREL EFFECT AS A SPECIAL CASE OF THE BARRIER-LAYER PHOTOELECTRIC CELL.—R. H. Müller and A. Spector. (*Phys. Review*, 1st Aug., 1932, Series 2, Vol. 41, No. 3, pp. 371–372.)

REPORT ON THE CONFERENCE ON "BARRIER-LAYER PHOTOELECTRIC CELLS AND RECTIFIERS."—I. Kurtschatow. (*Physik. Zeitschr. der Sowjetunion*, No. 1, Vol. 1, 1932, pp. 5–22.)

INVESTIGATION OF THE BARRIER-LAYER PHOTOCELL.—I. Kurtschatow and C. D. Sinelnikow. (*Ibid.*, pp. 23–41.)

Measurements of the spectral distribution of the photoelectric effects in (*e.g.*) copper-sulphide cells lead to the conclusion that the e.m.f. produced by illumination is of thermoelectric origin. The displacement of the maximum towards shorter waves, in copper-oxide cells on a decrease in temperature, is discussed. The results of this work, applied to selenium barrier-layer cells, are dealt with in a subsequent paper (pp. 42–49).

CATALYSIS AND PHOTO-CONDUCTORS [EFFECT OF ADDED SUBSTANCES ON THE RESISTANCE VARIATION OF SELENIUM PRODUCED BY LIGHT].—F. H. Constable and A. F. H. Ward. (*Trans. Faraday Soc.*, No. 5, Vol. 28, 1932, No. 132, pp. 497–508.)

The presence of small quantities of certain substances decreases the sensitivity of a selenium cell: other substances have no effect, while others (thallium, bismuth, copper, mercury and silver) considerably increase the sensitivity. Tests on different tempering and ageing temperatures, and on the relations between the "dark" resistance

and the illumination ratio, lead to the conclusion that these admixed substances do not play a magnifying or decreasing rôle in the ejection or recombination of electrons, but that they exert an important influence on the chemical constitution of the crystalline photo-sensitive mass.

MANUFACTURE OF STABLE SELENIUM SULPHIDE.—(Patent summary in *Electronics*, Aug., 1932, p. 274 : Nordlander.)

ZUR THEORIE DES KRISTALLPHOTOEFFEKTES (On the Theory of the Crystal Photoelectric Effect).—H. T. Wolff. (*Physik. Zeitschr.*, 15th Aug., 1932, Vol. 33, No. 16, pp. 621–624.)

An attempt to explain theoretically the "crystal photoelectric effect" discovered by Dember (1932 Abstracts, pp. 232 and 291).

ÜBER DIE ABHÄNGIGKEIT . . . (On the Dependence of the Maximum Velocities and Work Function of Photo-Electrons at Fractured Surfaces of Single Zinc Crystals on the Direction of the Surface).—A. Nitzsche. (*Ann. der Physik*, 1932, Series 5, Vol. 14, No. 4, pp. 463–480.)

The work function at the zinc crystal surface fractured perpendicularly to the hexagonal axis is found to be greater than that at surfaces fractured parallel to the hexagonal axis.

SOME PHOTOVOLTAIC PROPERTIES OF $Cu : Cu_2O/Pb(NO_3)_2$ SOLUTION/$Cu : Cu_2O$ PHOTOCELLS.—W. E. Meserve. (*Phys. Review*, 1st Aug., 1932, Series 2, Vol. 41, No. 3, p. 396 : abstract only.)

LEITFÄHIGKEIT DER DIELEKTRISCHEN FLÜSSIGKEITEN (Conductivity of Dielectric Fluids [Summarising Report]).—A. Nikuradse. (*Physik. Zeitschr.*, 1st Aug., 1932, Vol. 33, No. 15, pp. 553–575.)

DER DURCHSCHLAG DER ISOLIERENDEN FLÜSSIGKEIT (The Breakdown of the Liquid Dielectric [Influence of Pressure, Temperature, Purity, Frequency, Electrode Form, etc. : the Various Hypotheses]).—A. Nikuradse. (*Elektrot. u. Masch:bau.*, 21st Aug., 1932, Vol. 50, No. 34, pp. 465–470.)

SODIUM-VAPOUR [HIGHWAY] LIGHTING IN HOLLAND.—Philips' Company. (*Electronics*, Aug., 1932, p. 253.)

MEASUREMENTS AND STANDARDS.

MESSTECHNIK UND MESSGERÄTE IM BEREICH DER ULTRAKURZEN WELLEN (Measuring Technique and Apparatus for the Ultra-Short-Wave Zone).—K. Schlesinger. (*Hochf:tech. u. Elek:akus.*, Aug., 1932, Vol. 40, No. 2, pp. 68–72.)

The particular wave-range here considered is 4–9 m, and the apparatus involved consists of signal generator, potential divider, valve voltmeter, and the instrument or circuit under test. Difficulties encountered are chiefly due to the fact that the smallest parasitic capacities and the shortest lengths of common lead produce strong stray couplings, while currents through the capacity to earth of the load produce serious interfering voltages at the terminals of the latter.

Parasitic inductive couplings can be avoided with great difficulty by careful modes of connection (star connection) ; a frequent cause of trouble is the use of a common battery with insufficient choke provision in the leads. Parasitic capacitive couplings call for very careful screening and shielding ; the signal generator may well employ toroid coils and special condensers. The use of concentric tube leads enables lengths up to 50 cm to be worked with, without trouble, down to a wavelength of 4 m. Earth currents require compensation by means, for instance, of a differential condenser (Fig. 1).

A special signal generator, with purely capacitive reaction and calibrated frequency and modulation, is shown. A special calibrated capacitive voltage divider, by which (for instance) the coupling between signal generator and a circuit under test can be decreased continuously to zero, is described and illustrated (Figs. 3, 4 and 5). Another capacitive potential divider, for amplification measurements, is shown in Figs. 6 and 7. Section III describes a diode voltmeter with a straight line calibration from 0.15 v upwards, with only one battery for filament and anode supply ; it is independent of frequency over a wide range (so long as C can be considered a short circuit compared with the valve capacity). This arrangement is far better than the usual triode voltmeter. The use of a cathode-ray tube (as a voltage indicator for 10–20 v upwards) is mentioned.

Section IV describes and illustrates an instrument specially designed for the investigation of oscillatory circuits. It includes a valve rectifier which, thanks to a screen grid, behaves even at these frequencies as a practically ohmic resistance ("electron coupling") ; this can be connected in series with the unknown resonance resistance, and the variation of the rectified current on the introduction of this latter resistance found. From this the value of the unknown resistance is obtained by means of a note-frequency calibration and the substitution of a variable ohmic resistance in place of the circuit under test. The anode/cathode capacity is kept negligibly low by leading the anode out separately and by carefully earthing the screen grid.

LEISTUNGSMESSUNG MIT ELEKTRONENRÖHREN (Power Measurement with Electronic Valves).—H. Lange. (*Archiv f. Elektrot.*, 3rd Aug., 1932, Vol. 26, No. 8, pp. 570–579.)

This paper describes a method of measuring electrical power which is independent of frequency ; it employs the rectifying action of two triodes. Three operations must be performed :—(1) production of the quantities $u \pm ci$, where u is the voltage and i the current whose product is to be measured, and c a constant, (2) squaring them, (3) subtraction of the squares. Circuits are given for these operations, the choice of suitable valves is discussed, preparatory measurements are described and a typical calculation is shown. The corrections to be applied and the determination of the power consumption of the apparatus itself are also dealt with.

SOME ASPECTS OF THE VALVE BRIDGE WITH A DESCRIPTION OF A NEW COMPENSATED VALVE-VOLTMETER.—A. S. McFarlane. (*Phil. Mag.*, July, 1932, Vol. 14, No. 89, pp. 1–18.)

Author's summary :—(1) The general theoretical relationships which hold in a Wheatstone Bridge system, two of the arms of which consist of triode valves, are considered and an expression is deduced, and experimentally verified, for the condition that the bridge may be simultaneously balanced and compensated against fluctuations in the h.t. supply. (2) The theory of a new device, whereby the filament and grid voltages are derived from the 4-volt battery in such a way that minor changes in voltage of this battery have no significant effect on the bridge zero, is given. (3) There is described a robust practical form of valve-voltmeter, compensated against changes of 20 volts in the h.t. supply and 0.3 volt in the common grid, l.t. supply, and a simple empirical procedure is given for adjusting the compensating device. [The voltmeter is found to measure accurately to tenths of a millivolt.]

BROWNIAN MOTION AS THE LIMIT OF THE TECHNIQUE OF MEASUREMENT.—M. Czerny. (Summary in *Sci. Abstracts, Sec. A*, Aug., 1932, Vol. 35, No. 416, p. 684.)

NATURAL OBSERVATION LIMIT OF RADIOMETRIC MEASUREMENTS.—C. H. Cartwright. (*Physics*, No. 4, Vol. 1, 1931, pp. 211–229.)

The writer concludes that the thermoelement with galvanometer, and the radiomicrometer, are the most sensitive instruments for radiation measurements : with a 1-second swing an energy of 3×10^{-11} cal/sec. per mm^2 of receiver can be detected.

A PRECISION BRIDGE FOR RESISTANCE MEASUREMENT AT SPEECH FREQUENCIES [NEW METHOD OF AVOIDING CAPACITY EFFECTS].—P. Klaudy. (Summary in *Physik. Ber.*, 16th Aug., 1932, Vol. 13, No. 16, p. 1512.)

WOZU DIENT DIE GLIMMBRÜCKE UND WIE IST SIE EINGERICHTET ? (What are the Uses of the "Glow Discharge Bridge" and How is It Arranged ?).—Geffcken and Richter : Huth. (*Rad., B., F. f. Alle*, July, 1932, pp. 318–321.)

A practical article on the instrument referred to in March Abstracts, p. 175, and its many uses.

THE USE OF THE RECTIFIER BRIDGE IN TEST ROOM TECHNIQUE [AS PHASE-SENSITIVE INDICATOR, FREQUENCY ANALYSER, ETC.].—C. H. Walter. (*Zeitschr. f. tech. Phys.*, No. 9, Vol. 13, 1932, pp. 436–441.)

Applications of the apparatus referred to in October Abstracts, p. 593.—"It is particularly valuable as a phase-sensitive indicator for bridge measurements. The phase relations of a bridge composed of complex resistances are investigated. Methods of connection are given by which the indicating instrument responds only to changes of the in-phase component, of the wattless component, or of the magnitude of the unknown resistance. The rectifier bridge can also be used as an in-phase and wattless current ammeter, for the measurement of the transmission angles of networks, for frequency indication and for the analysis of a mixture of frequencies. Some apparatus built on the principle [Siemens and Halske] is described." The same principle is employed in the ultra-micrometer circuits used for the control of processes in the manufacture of rubber and of paper (April Abstracts, p. 242). Another application mentioned as highly advantageous is for the recording of slow or rapid capacity changes in connection with the condenser microphone, instead of the half-resonance-curve method.

FREQUENCY MEASURING OUTFIT FOR CHECKING WAVELENGTHS OF FRENCH TRANSMITTERS [AT THE NOISEAU RECEIVING STATION].—(*Bull. de la S.F.R.*, May-June-July, 1932, Vol. 6, No. 4, pp. 66–75.)

FREQUENCY MEASURING CIRCUIT.—(Patent summary in *Electronics*, Aug., 1932, p. 273 : Horton.)

By supplying the oscillations to be measured to a resistance and to a tuned circuit, and obtaining and comparing the voltages corresponding to the sum and difference of the voltage across the resistance and the voltage dependent in magnitude on the current to the tuned circuit.

HOW ELECTRON-COUPLED OSCILLATORS MAKE STILL BETTER FREQUENCY METERS : CONSTRUCTIONAL DETAILS OF TWO NEW MODELS.—R. B. Parmenter : G. D. Meserve. (*QST*, July, 1932, Vol. 16, pp. 26–30.)

THE DESIGN OF SINGLE LAYER COILS.—R. T. Beatty. (*Wireless World*, 12th August, 1932, Vol. 31, pp. 122–123.)

Simplified calculations and an abac are given for close-wound inductances.

MEASUREMENT OF DIELECTRIC CONSTANTS OF LIQUIDS BY MEANS OF A CRYSTAL-REGULATED RESONANCE APPARATUS.—H. Ulich and W. Nespital. (Summary in *Sci. Abstracts, Sec. A.*, Aug., 1932, Vol. 35, No. 416, p. 737.)

THE DIELECTRIC CONSTANT OF WATER AND ITS TEMPERATURE COEFFICIENT AS DETERMINED BY A RESONANCE METHOD.—E. P. Linton and O. Maass. (Summary in *Physik. Ber.*, 16th Aug., 1932, Vol. 13, No. 16, p. 1513.)

VERFEINERUNG DER . . . (Refinement of the Bridge Method for Measuring Electrolytic Resistances at High Frequencies).—W. Geyer. (*Ann. der Physik*, 1932, Series 5, Vol. 14, No. 3, pp. 299–320.)

ABSOLUTMESSUNG DER HOCHFREQUENZLEITFÄHIGKEIT VON FLÜSSIGKEITEN BEI 3 M WELLENLÄNGE (Absolute Measurement of the High-Frequency Conductivity of Liquids at 3 m Wavelength).—H. Schaefer. (*Zeitschr. f. Physik*, 1932, Vol. 77, No. 1/2, pp. 117–122.)

ON TEMPERATURE COMPENSATION IN A.C. LOW-TENSION VOLTMETERS WITH COPPER-OXIDE RECTIFIERS.—V. Rozhdestvensky. (*Westnik Elektrot.*, No. 11/12, 1931, Sec. I, pp. 471–475.)

INDICATING ELECTRICAL INSTRUMENTS.—C. V. Drysdale. (*Journ. Scient. Instr.*, July, 1932, Vol. 9, pp. 209–216.)

THE PRINCIPLES OF A NEW PORTABLE ELECTROMETER.—R. Gunn. (*Phys. Review*, 15th June, 1932, Series 2, Vol. 40, No. 6, p. 1031.)

A NEW APPARATUS FOR MEASURING THE RESISTANCE OF EARTH CONNECTIONS.—J. Gerstbach : Masa. (*Elektrot. u. Masch:bau*, 26th June, 1932, Vol. 50, pp. 369–371.)

EARTH RESISTANCE MEASUREMENT [MEGGER AND MEG EARTH TESTERS].—Evershed & Vignoles, Ltd. (*Electrician*, 1st July, 1932, Vol. 109, p. 19.)

THE MEASUREMENT OF RADIO INTERFERENCE [HIGH FREQUENCY SPECTRA OF DISTURBANCES FROM MOTORS, RECTIFIERS, ETC.].—Alexander. (*See* abstract under "Reception.")

THE ABSOLUTE MEASUREMENT OF HIGH ELECTRICAL PRESSURES.—W. M. Thornton and W. G. Thompson. (*Journ. I.E.E.*, June, 1932, Vol. 71, No. 426, pp. 1–15 : Discussion, pp. 16–23.)

DIPOLE MOMENTS AND MOLECULAR STRUCTURE. PART I. A SIMPLE RESONANCE METHOD FOR THE MEASUREMENT OF DIELECTRIC CONSTANTS [OF SOLUTIONS].—J. W. Smith. (*Proc. Roy. Soc.*, 2nd May, 1932, Vol. 136, No. A 829, pp. 251–255.)

THE MEASUREMENT OF REFLECTION COEFFICIENTS FOR OBLIQUE INCIDENCE [BY SPREADING THE MATERIAL ON THE METAL RECEIVER OF A THERMOPILE].—H. E. Beckett. (*Proc. Physical Soc.*, 1st July, 1932, Vol. 44, Part 4, No. 244, pp. 439–444.)

DIMENSIONS OF FUNDAMENTAL UNITS.—W. Cramp. (*Nature*, 3rd Sept., 1932, Vol. 130, p. 368.)

The writer suggests that a much simpler system of units would be obtained by using Q (quantity of electricity), L (length) and T (time) as fundamental units ; M (mass) is regarded as a function of Q.

ELECTRIC AND MAGNETIC UNITS.—V. Karapetoff. (*Electrician*, 3rd June, 1932, Vol. 108, pp. 755–756.)

The author formulates a general system of units from which the various electric and magnetic systems now in use—and possible future systems—can be derived as specific cases. *See* also *Phys. Review*, 15th June, 1932, Vol. 40, p. 1051.

CHOIX D'UN SYSTÈME D'UNITÉS ÉLECTROMAGNÉTIQUES (Choice of a System of Electromagnetic Units [and the Selection of the Fourth Fundamental Unit]).—D. Germani. (*Rev. Gén. de l'Élec.*, 9th July, 1932, Vol. 32, No. 2, pp. 39–50.)

See also review of Sudria's book on electrical units, *Wireless Engineer*, July, 1932, p. 395.

ELECTROMAGNETIC EQUATIONS AND SYSTEMS OF UNITS.—Leigh Page. (*Physics*, April, 1932, Vol. 2, pp. 288–302.)

Giving arguments for the adoption of systems of units, one for the physicist and a practical one for the engineer, in which the fundamental electromagnetic equations would have the same simple form.

A PROPOSAL TO ABOLISH THE ABSOLUTE ELECTRICAL DIMENSION SYSTEMS.—E. Weber. (*Phys. Review*, 15th June, 1932, Vol. 40, No. 6, pp. 1056–1057.) Abstract only.

THREE SUPERFLUOUS SYSTEMS OF ELECTROMAGNETIC UNITS.—G. A. Campbell. (*Phys. Review*, 15th June, 1932, Series 2, Vol. 40, No. 6, p. 1051.)

MAGNETIC UNITS.—A. E. Kennelly. (*Phys. Review*, 15th June, 1932, Series 2, Vol. 40, No. 6, p. 1050.)

Abstract only of a paper giving arguments for and against the assignation of further unit magnitudes in the practical magnetic system.

A SYSTEM OF PRACTICAL UNITS WITH FOUR FUNDAMENTAL DIMENSIONS.—E. Bodea. (*Rev. Gén. de l'Élec.*, 23rd July, Vol. 32, p. 113.)

ON THE QUESTION OF ELECTRICAL AND MAGNETIC UNITS.—A. Blondel. (*Rev. Gén. de l'Élec.*, 16th July, 1932, Vol. 32, pp. 71–76.)

CORRECTIONS TO THE ABOVE TWO PAPERS.—Bodea : Blondel. (*Ibid.*, 27th Aug., 1932, p. 248.)

ON THE STRUCTURE OF SYSTEMS OF UNITS AND THE DEFINITION OF MAGNITUDES IN ELECTRICAL TECHNIQUE.—C. Budeanu. (*Rev. Gén. de l'Élec.*, 27th Aug., 1932, Vol. 32, No. 8, pp. 239–246.)

SUBSIDIARY APPARATUS AND MATERIALS.

DIE BRAUNSCHE RÖHRE BEI SEHR HOHEN FREQUENZEN (The Cathode-Ray Tube at Very High Frequencies [up to about 10^{10} c/s]).—H. E. Hollmann. (*Hoch:tech. u. Elek:akus.*, Sept., 1932, Vol. 40, No. 3, pp. 97–103.)

Author's summary :—For the case where the periodic time of the deflecting potential is of the order of the electron path time between the deflecting plates, the electron motion in the periodically changing accelerating field is first of all examined. For a constant ray velocity, the deflection (and hence the dynamic sensitivity) of a given tube passes, as the frequency is increased, through a series of maxima which decrease with $1/\omega$ and are separated by points of complete insensitivity ; they can be displaced by changing the anode potential. The optimum length of plate (*i.e.*, that giving the greatest sensitivity) corresponds to a half wavelength reduced in the ratio of the ray velocity v_0 to the velocity of light c ; this explains the decrease of dynamic sensitivity as the wavelength is shortened. The theoretical conclusions are confirmed by experiment : in particular, the measurement [on a specially constructed tube] of the deflecting voltage for a 70 cm wave, by means of a peak voltmeter in a retarding field circuit [Fig. 6], confirms the theoretical relation between the static and dynamic sensitivities [Fig. 7].

In the case where there are two sets of deflecting plates, at right angles, with an axial distance d between centres, a phase displacement occurs between the two co-ordinate axes which is given by $\psi = \omega\tau$, where τ is the electron time over the gap d. If the phase angle is a multiple of π the tube will work without phase displacement ; this is confirmed by experiment [Fig. 9].

Various ways of ensuring phase correctness are given. The first depends on linking the com-

pensation for phase rotation with the condition for maximum sensitivity, by making the distance d equal to a multiple of the length of plate. Then by adjusting the anode potential to give maximum deflection, the tube works true to phase. The other method employs a phase compensation independent of anode potential: one pair of plates is divided into two halves, one on either side of the second pair, these two halves producing equal but opposite displacements of phase which result in a zero displacement under all conditions [Figs. 12 and 13].

A New Cathode-Ray Tube with Small Ray Velocity [Sensitivity around 1 mm/volt with a Working Voltage of 300 v].—G. Dobke: AEG. (*Zeitschr. f. tech. Phys.*, No. 9, Vol. 13, 1932, pp. 432–436.)

The electron source is a hollow emission body mounted inside (and near the front end of) a small tube heated by a coaxial tungsten spiral: the electrons emitted at the inner surface emerge from a hole in the closed front end of this tube. The vital inner surface is protected from the ions shot out from the anode, and the life of such a cathode has reached 3 000 hours without appreciable decrease of emission. Mercury vapour is used for the ray concentration. Since, owing to the considerably screened cathode, the smallest possible gap between anode and cathode is required in order to give sufficient ray intensity at small anode voltages, a perforated screen at anode potential is introduced between cathode and Wehnelt cylinder.

A New Sweep-Circuit Device for the Cathode-Ray Oscillograph [giving Saw-Tooth Waves up to 50 kc/s and probably over].—G. S. Field. (*Canadian Journ. of Res.*, Aug., 1932, Vol. 7, No. 2, pp. 131–132 and plate.)

To avoid the difficulties arising, at frequencies above about 10 kc/s, from the time required for ionisation and de-ionisation of the gas in a neon tube or thyratron, the time-base described uses no gaseous discharge tube at all, the four triodes and one diode (triode with plate and grid connected) being ordinary receiving valves. In most cases one triode can be dispensed with, and the circuit then consists simply of one triode through which the timing condenser charges, the diode through which it discharges, and a two-triode amplifier which controls the grid potential of the charging triode. The number of waves in a sweep may be altered by adjusting the discharge-time of the condenser by changing either its capacity or the filament current of the diode.

Investigations on Cathode-Ray Tubes containing Gas.—M. von Ardenne. (*Proc. Inst. Rad. Eng.*, Aug., 1932, Vol. 20, pp. 1310–1323.)

English version of the paper dealt with very fully in April Abstracts, pp. 237–238.

The Physics of the Braun [Cathode-Ray] Tube.—M. von Ardenne. (Summary in *Electronics*, Aug., 1932, p. 268.)

Summary of a *Funk, Berlin*, article apparently covering some of the ground of the writer's long paper referred to above.

The Cathode-Ray Oscillograph in Radio Research: Royal Society Demonstration and Lecture.—Radio Research Station, Slough: R. A. Watson Watt. (*Wireless Engineer*, Aug., 1932, Vol. 9, No. 107, pp. 449–450.)

The Use of the [von Ardenne] Cathode-Ray Oscillograph for Recording the Wave Form of High Voltages.—R. Vieweg and G. Pfestorf. (*E.T.Z.*, 22nd Sept., 1932, Vol. 53, No. 38, pp. 913–915.)

Cathode-Ray Tubes and Their Use.—E. Alberti. (Reviewed in *Bull. Assoc. suisse d. Élec.*, 5th Aug., 1932, Vol. 23, No. 16, pp. 427–428.)

Electron Microscopes.—Brüche and Johannson: Knoll and Ruska. (*Zeitschr. V.D.I.*, 16th July, 1932, Vol. 76, No. 29, p. 704.)

Based on the papers dealt with in Abstracts, August, p. 476, and July, p. 418.

A Vibrating Reed Oscillograph [Moving-Coil Loud Speaker Design, Coil held by Reed].—F. J. Shollenberger. (*Review Scient. Instr.*, July, 1932, Vol. 3, pp. 365–366.)

The Use of a Thermionic Tetrode for Voltage Control.—J. C. Street and T. H. Johnson. (*Journ. Franklin Inst.*, Aug., 1932, Vol. 214, No. 2, pp. 155–162.)

This paper describes two circuits in which screen grid valves are used to supply potentials of the order of 1 500 volts to Geiger-Müller counters; the current consumption is required to be very small, of the order of 10^{-8} amp., but the applied voltage must be constant to within 2 or 3 volts. In the first circuit the input is applied between anode and the negative end of a resistance R (of the order of 10^6 ohms), the positive end of which is connected to the heated electrode of the valve. The grid is connected through a bias battery E_g to a point on R such that the resistance r between it and the heated electrode is of the order of 70 000 ohms. The screen electrode is connected to the heated electrode through a bias battery E_s. The output is taken off across R, the negative end of which is connected to the anode. This type of circuit may be extended to two or more stages. In the second type of circuit the input voltage is inserted across a resistance $r_1 + r_2$ and the output taken off across R. Resistance r_1 is in series with E_g and grid, and the screen electrode is connected through E_s to the junction of r_1 and r_2. The theory of the circuits is investigated and numerical examples given. "The first circuit is more flexible in that the output potential is easily adjustable in small steps, whereas the second can be adjusted to require no control grid bias battery, so that fluctuations due to this source may be eliminated."

Vapour-Pressure Tests on Greases for High Vacuum Work, by a Thermionic Method.—W. Espe and I. Kroczek. (*Zeitschr. f. tech. Phys.*, No. 9, Vol. 13, 1932, pp. 443–446.)

Beitrag zur Kerroszillographie (Contribution to Kerr-Cell Oscillography).—E. Trümper. (*Archiv f. Elektrot.*, 3rd Aug., 1932, Vol. 26, No. 8, pp. 562–659.)

This paper contains an investigation of the use

of the electro-optical Kerr effect for oscillographic purposes; the optical and photographical foundations of the method are explained and some typical oscillograms are given showing that, with the use of colourless nitro-benzol, time deflections several times greater than the hitherto customary value of 10 metres per second may be attained.

THE "OSISO" OSCILLOGRAPH EQUIPMENT FOR THE AUTOMATIC RECORDING OF RANDOM PHENOMENA [WITH DEVICE FOR RAPID LIGHTING-UP OF RECORDING LAMP].—J. T. Johnson. (Summary in *Elektrot. u. Masch:bau*, 17th July, 1932, Vol. 50, No. 29, p. 411.)

For a previous paper on this loop oscillograph, *see* 1929 Abstracts, p. 642.

DER TESLATRANSFORMATOR ALS . . . (The Tesla Transformer as a High Frequency Test Generator and Its Investigation with the Cathode-Ray Oscillograph).—P. Hochhäusler. (*Archiv f. Elektrot.*, July, 1932, Vol. 26, No. 7, pp. 518–534.)

A VACUUM TUBE AMPLIFIER FOR FEEBLE PULSES [AND AN ELECTROMETER VALVE AFTER LEPRINCE-RINGUET].—L. F. Curtiss. (*Bur. of Stds. Journ. of Res.*, Aug., 1932, Vol. 9, No. 2, pp. 115–120.)

Author's summary:—"A resistance-capacity coupled 5-stage amplifier is described which is suitable for automatic registration of the primary ionisation pulses produced when corpuscular rays pass through a shallow ionisation chamber. A discussion of an improved type of ionisation chamber is given." The construction of a special electrometer triode after Leprince-Ringuet (Abstracts, 1931, p. 513, and 1932, p. 475) is described.

ONE-TUBE BALANCED CIRCUIT FOR D.C. VACUUM TUBE AMPLIFIERS OF VERY SMALL CURRENTS.—W. Soller. (*Review Scient. Instr.*, Aug., 1932, Vol. 3, pp. 416–422.)

Having "all the advantages of the two-tube balanced circuit without extra equipment," and yet as easily set up as an unbalanced circuit.

DIE SCHIRMWIRKUNG METALLISCHER HÜLLEN GEGEN MAGNETISCHE WECHSELFELDER (The Shielding Action of Metallic Screens against Alternating Magnetic Fields).—H. Kaden. (*Hochf:tech. u. Elek:akus.*, Sept., 1932, Vol. 40, No. 3, pp. 92–97.)

Author's summary:—The shielding action is calculated for simple screens. Thin-walled screens act, for low frequencies, as short circuited windings [equation 3], while for higher frequencies and comparatively thick walls the shielding effect involves current and flux skin effect [equation 4]. Sets of curves show this behaviour quantitatively, for the transition regions also. The influence of the shape of the screen on its screening action is shown to be unimportant: thus the design of a screen for practical purposes can be carried out by treating it as one of the simple screens here dealt with. The required wall thickness for a given screening effect and given external dimensions is thus obtained direct from the curves of Fig. 6.

MAGNETISCHE EIGENSCHAFTEN DÜNNER METALLSCHICHTEN (Magnetic Properties of Thin Metallic Films [Iron and Nickel]).—W. Elenbaas. (*Zeitschr. f. Physik*, 1932, Vol. 76, No. 11/12, pp. 829–848.)

THE MAGNETIC SUSCEPTIBILITY OF IRON POWDER COMPOSITIONS, AND ITS DEPENDENCE ON PARTICLE SIZE AND SEPARATION.—E. Gerold. (*Archiv f. Elektrot.*, No. 3, Vol. 26, 1932, pp. 168–176.)

BARKHAUSEN EFFECT. III. NATURE OF CHANGE OF MAGNETIZATION IN ELEMENTARY DOMAINS.—R. M. Bozorth and J. F. Dillinger. (*Phys. Review*, 1st August, 1932, Series 2, Vol. 41, No. 3, pp. 345–355.)

HIGH INDUCTANCE SMOOTHING CHOKE.—H. B. Dent. (*Wireless World*, 9th September, 1932, Vol. 31, pp. 258–259.)

An article for the amateur constructor in which is described a 75-henry a.f. choke to replace the loud speaker field in those mains-operated receivers which were originally designed to utilise it for smoothing purposes.

TRANSFORMER EQUIPMENT FOR LARGE EXPERIMENTAL RADIOTELEPHONE TRANSMITTER [LONG-WAVE TRANSOCEANIC].—W. R. Lyon. (*Bell Lab. Record*, June, 1932, Vol. 10, pp. 357–361.)

GRID-CONTROLLED MERCURY-ARC RECTIFIERS.—H. D. Brown. (*Gen. Elec. Review*, Aug., 1932, Vol. 35, pp. 439–444.)

RESEARCHES ON THE INFLUENCE OF THE MERCURY VAPOUR DENSITY IN THE ANODE SPACE ON THE VOLTAGE DROP IN MERCURY VAPOUR ARC [RECTIFIERS].—E. Kobel. (*E.T.Z.*, 15th Sept., 1932, Vol. 53, No. 37, pp. 881–883.)

THE USE OF HOT-CATHODE RECTIFIERS IN VARIOUS CONNECTIONS.—K. Meyer. (*E.T.Z.*, 8th Sept., 1932, Vol. 53, No. 36, pp. 858–861.)

CONTACT RECTIFIERS [EXPERIMENTAL COMPARISON OF COPPER-OXIDE AND SELENIUM RECTIFIERS: AND THE ADVANTAGES OF THE LATTER].—G. S. Altmann. (*Westnik Elektrot.*, No. 11/12, 1931, Sec. I, pp. 417–422.)

REPORT ON THE CONFERENCE ON "BARRIER-LAYER PHOTOELECTRIC CELLS AND RECTIFIERS."—Kurtschatow. (*See* under "Phototelegraphy and Television.")

INVESTIGATION OF THE BARRIER-LAYER PHOTOCELL.—Kurtschatow and Sinelnikow. (*Ibid.*)

CURRENT RECTIFICATION AT METAL CONTACTS.—S. P. Chakravarti and S. R. Kantebet. (*Proc. Inst. Rad. Eng.*, Sept., 1932, Vol. 20, pp. 1519–1534.)

Authors' summary:—Six different contacts of dissimilar metals, namely Cu-Fe, Cu-Sn, Sn-Zn, Zn-Fe, Bi-Fe, and Pb-Sn, were studied for their rectifying properties. As far as possible small lengths of cylindrical rods with circular section were used. Their tips barely touched each other, producing an imperfect contact at which rectification was found to take place best. In all cases,

static characteristics showed that when the thermo-positive element was given a positive polarity, the characteristic reached saturation conditions, while with reversed polarities the contact behaved like an ohmic resistance. On the positive side the characteristic starts with being straight for a distance and then, with a sudden rise, reaches saturation.

The effects of varying contact area, pressure, and temperature were next studied. Rectification improved with diminution of contact area, point-to-point contact being the best. The rectification vanished on either side of the limiting added weights (1 to 2 grams). External heating of contact renders the characteristics almost a straight line up to the saturation bend. An attempt is made to explain the rectifying property by assuming that a thermo e.m.f. develops at the contact and that the resistance of the contact itself varies with terminal voltage.

DIE GRUNDLAGEN DER DURCH GLIMMTEILER "STABILISIERTEN" STROMQUELLEN (The Basis of Current Sources "Stabilised" by the Glow-Discharge Potential Divider).—L. Körös and R. Seidelbach. (*Archiv f. Elektrot.*, 3rd Aug., 1932, Vol. 26, No. 8, pp. 539–552.)

Authors' summary :—"The glow-discharge potential divider, which works with portions of a gas discharge, is described and its equivalent circuit is given. The physical laws obeyed by the potential divider are derived and it is shown that a current source 'stabilised' by it is equivalent to an accumulator battery as regards its physical-technical properties, apart from energy storage. The working conditions of such stabilised current sources are discussed, with practical examples." *See* also October Abstracts, pp. 596–597.

IMPROVEMENTS IN THE GRADUAL REGULATION OF ALTERNATING CURRENTS.—(Patent summary in *Rev. Gén. de l'Élec.*, 30th July, 1932, Vol. 32, pp. 38–39 D.)

AN IMPROVED B ELIMINATOR FOR AUTOMOBILE RECEIVERS [WITH AUTOMATIC LOAD DELAY CIRCUIT FOR PREVENTING BURNING OF VIBRATOR CONTACTS BEFORE RECTIFIER HEATER REACHES WORKING TEMPERATURE].—W. W. Garstang. (*Electronics*, Aug., 1932, pp. 254–255.)

BATTERY VOLTAGE REGULATOR [PERIODIC CONNECTION THROUGH CONDENSER TO A SECOND, CONSTANT VOLTAGE BATTERY].—(Patent summary in *Electronics*, Aug., 1932, p. 273 : Holden.)

SMALL SYNCHRONOUS MOTORS : IMPROVEMENT DUE TO GROOVES IN AUXILIARY POLE-PIECES.—Siemens and Halske Company. (Patent summary in *Rev. Gén. de l'Élec.*, 27th Aug., 1932, Vol. 32, p. 64 D.)

ABSORPTION IN ELECTRIC CONDENSERS [PARAFFIN WAX–PAPER TYPE].—R. E. W. Maddison. (*Journ. Franklin Inst.*, Sept., 1932, Vol. 214 No. 3, pp. 327–343.)

Author's summary :—The phenomena of positive and negative electrification in condensers of the paraffin wax-paper type are discussed in the light of recent work on current conduction in textiles and insulating oil. The harmful effect of electrolytic reactions on the ability of such condensers to withstand electric breakdown is discussed.

CHEMICAL RESEARCH IN INSULATING MATERIALS [A RÉSUMÉ OF PAPERS].—F. M. Clark. (Summary in *Sci. Abstracts, Sec. B*, Aug., 1932, Vol. 35, No. 416, p. 422.)

RUBBER SUBSTITUTE UNAFFECTED BY SOLVENTS [THIOKOL].—(*Electronics*, July, 1932, p. 240.)

ON THE MECHANISM OF ELECTRICAL BREAKDOWN [IN ROCK SALT, MICA, ETC.].—A. Joffé. (*Physik. Zeitschr. der Sowjetunion*, No. 1, Vol. 1, 1932, pp. 155–188.)

DISCUSSION ON "DIELECTRIC PHENOMENA AT HIGH VOLTAGES."—Goodlet, Edwards and Perry. (*Journ. I.E.E.*, June, 1932, Vol. 71, No. 426, pp. 97–101.)

Further discussion of the paper dealt with in 1931 Abstracts, pp. 513 and 626.

DES ISOLANTS (Some Insulating Materials).—A. R. Matthis. (*Rev. Gén. de l'Élec.*, 18th June, 1932, Vol. 31, pp. 837–845.)

DIELECTRIC PROPERTIES OF SOME GLYCOLS : DEVELOPMENT OF POLAR CHARACTERISTICS IN INSULATING OILS.—A. H. White and S. O. Morgan : W. N. Stoops. (*Physics*, May, 1932, Vol. 2, pp. 313–321 : 322–328.)

MEASUREMENT OF POWER FACTOR AND LOSS IN DIELECTRICS [LIQUID, SOLID AND COMPOSITE].—T. J. Mirchandani, G. Yoganandam, S. K. Roy and N. V. Narayanaswami. (*Journ. Indian Inst. of Sci.*, Part II, Vol. 15 B, pp. 17–32.)

ON THE VARIATION WITH POTENTIAL OF THE DIELECTRIC LOSS ANGLE OF CERTAIN INSULATING MATERIALS.—M. Hirsch. (*E.T.Z.*, 15th Sept., 1932, Vol. 53, No. 37, pp. 888–889.)

THE DIELECTRIC CONSTANT OF LIQUID SULPHUR.—H. J. Curtis. (*Phys. Review*, 1st Aug., 1932, Series 2, Vol. 41, No. 3, p. 386 : abstract only.)

IONISATION OF SOLID DIELECTRICS BY X-RAY IRRADIATION [RESULTING CONDUCTIVITY OBEYS OHM'S LAW : AT 570 VOLTS THE IONISATION IN SULPHUR EXCEEDS THAT IN AIR].—M. Bender. (*Zeitschr. f. tech. Phys.*, No. 9, Vol. 13, 1932, pp. 431–432.)

DER HOCHOHM-WIDERSTAND (The High Ohmic Resistances of the Hochohm Company, Berlin).—(*Hochf:tech. u. Elek:akus.*, July, 1932, Vol. 40, No. 1, p. 39.)

From 100 ohms to 10 megohms, with a tolerance of ± 5%. The resistive layer is of an almost diamond-hard form of carbon, deposited on and burnt into a porcelain rod. Permissible loads range from 0.5 to 10 watts, and the resistances are said to be unusually free from inductance, capacity, and noise.

ERSCHÜTTERUNGSFREIE AUFSTELLUNG MITTELS LUFTPOLSTER (Shock-Proof Mounting using Air Cushioning).—E. Gehrcke and B. Voigt. (*Zeitschr. f. tech. Phys.*, No. 8, Vol. 13, 1932, pp. 387–390.)

An investigation of the authors' mounting re-

ferred to in April Abstracts, p. 239, and its application to galvanometers.

AUTOMATIC TEMPERATURE REGULATOR [USING THERMO-JUNCTION AND GALVANOMETER WITH PERIODIC CONTACTING].—(*E.T.Z.*, 7th July, 1932, Vol. 53, p. 655.)

SELBSTTÄTIGE TEMPERATURREGULIERUNG . . . (Automatic Temperature Control [to within 0.001°C] by Resistance Thermometer, Mirror Galvanometer and Optical Relay).—H. Moser. (*Zeitschr. f. tech. Phys.*, No. 8, Vol. 13, 1932, pp. 383–385.)

A QUANTITATIVE THERMOELECTRIC MAGNIFIER FOR OPTICAL POINTERS.—J. H. Jeffree. (*Phil. Mag.*, Sept., 1932, Series 7, Vol. 14, No. 91, pp. 366–372.)

DER PRISMENDERIVATOR (The Prism Derivator).—E. von Harbou. (*E.T.Z.*, 4th Aug., 1932, Vol. 53, No. 31, pp. 754–755.) *See* also next abstract.

DIE TANGENSPLATTE . . . (The Tangent Plate, an Auxiliary to the Prismatic Derivator. Graphical Differentiation with Prismatic Derivator and Tangent Plate).—J. Picht: von Harbou. (*Zeitschr. f. tech. Phys.*, No. 7, Vol. 13, 1932, pp. 316–319.)

See also Kirsten, *ibid.*, pp. 341–342. For a previous reference to the prismatic derivator *see* Feb. Abstracts, p. 111.

ÜBER DIE WIRBELSTROMVERZÖGERUNG MAGNETISCHER SCHALTVORGÄNGE (The Eddy Current Delay of Magnetic Switching Processes [*e.g.*, in Relays]).—W. Wolman and H. Kaden. (*Zeitschr. f. tech. Phys.*, No. 7, Vol. 13, 1932, pp. 330–335.)

ELECTRO-MECHANICAL INTEGRAPHS AND THE SOLUTION OF DIFFERENTIAL EQUATIONS WITH VARIABLE COEFFICIENTS.—P. Fourmarier: Bush. (Long summary in *Sci. Abstracts, Sec. B*, June, 1932, Vol. 35, No. 414, pp. 311–312.)

AN "EXPONENTIAL" SLIDE RULE.—L. B. Sklar. (*Elec. Engineering*, June, 1932, Vol. 51, pp. 400–401.)

TEMPERATURE REGULATOR FOR ELECTRICAL RESISTANCE FURNACES.—R. F. Proctor and R. W. Douglas. (*Journ. Scient. Instr.*, June, 1932, Vol. 9, pp. 192–195.)

CONTACT-MAKING [METERING] INSTRUMENTS.—F. S. Marcellus and S. W. Spengler. (*Gen. Elec. Review*, June, 1932, Vol. 35, p. 351.)

VDE REQUIREMENTS FOR WALL PLUGS AND SOCKETS, AND METHODS OF TESTING.—(*E.T.Z.*, 18th Aug., 1932, Vol. 53, No. 33, pp. 789–793.)

SOME DEVELOPMENTS IN TELEGRAPH TECHNIQUE AS APPLIED TO RADIO CIRCUITS [INCLUDING A SELF-RESTORING VALVE TRIGGER-EFFECT RELAY].—H. Faulkner and G. T. Evans. (Summary in *Sci. Abstracts, Sec. B.*, Aug., 1932, Vol. 35, No. 416, p. 485.)

This relay circuit is applied to the short-wave transmitters at Leafield. Another use is in phototelegraphy. It belongs to the same family as the Jordan and Eccles and Kallirotron relays, but is self-restoring.

STATIONS, DESIGN AND OPERATION.

ÜBER LANGWELLEN - FLUGFUNKVERBINDUNGEN (Long-Wave Communication for Aircraft).—F. Eisner. (*E.T.Z.*, 1st and 8th Sept., 1932, Vol. 53, pp. 834–838 and 864–866.)

From the German Aircraft Research Establishment (DVL). (1) Introduction. (2) Power input and radiating conditions in the aircraft: the shapes taken by ordinary trailing aerials and by the DVL "L" trailing aerial (1931 Abstracts, p. 557): the graphical determination of the effective height (for an "L" aerial the height thus obtained was 23.2 m while the measured height came out at 24.7 m; this compares with 8.5 m for a normal trailing aerial, with about 16 m for one of specially fine steel wire, and with 29 m for the "Graf Zeppelin" trailing aerial): the desirability of fixed aerials, but their inadequacy even on the largest aeroplanes, except perhaps over sea—effective height of the order of 1 m only: total resistances of trailing-aerial circuit at different wavelengths (radiation resistance from 0.40 ohm at 450 m to 0.051 ohm at 1 350 m; corresponding values for aerial resistance alone 5.3 and 3.9 ohms, for total circuit resistance 12.1 and 24.5 ohms, so that most of the power is obviously consumed in the tuning components of the circuit): input and output (aerial) powers of "70 w" and "10 w" transmitters (inputs 1 100 and 142 w respectively, anode powers 193 and 62 w, powers in aerial circuit 81 and 24.9 w, powers to aerial 22.8 and 5.8 w): effect of flying height on the radiation: polar diagram of a trailing aerial.

(3) Receiving conditions on the aircraft: types of interference particularly troublesome in long-wave reception: "masking effect" produced on a given note frequency by interference of a lower frequency (Fig. 6, where the masking frequency is 800 c/s and the masked frequencies 250 and 1 100 c/s respectively; the greatly increased slope of the masking curve for the latter frequency is obvious): audigrams of the noise levels in a Junker F 13 (the aircraft noises, inside or outside the cabin, produce an effect of one-third total deafness: *frequencies around* 1 000 c/s *penetrate best*): intelligibility curves (telegraphy and syllables) for various conditions:—c.w. telegraphy requires at least 1 volt telephone voltage for nearly 100% accuracy; telephony at least 3–10 volts for the adequate syllable accuracy of 40–50%. The corresponding minimum field strengths are 5 μv/m and 200–600 μv/m: reasons for this great difference (sensitivity and selectivity curves for c.w. and modulated signals).

The second instalment begins with section (4) on the calculation of ranges. The index α in the expressions $e^{-\alpha d}$ and $e^{-\alpha d/\sqrt{l}}$ can be taken as independent of distance for a first approximation. *No variation of* α *with flying height has yet been found with long waves.* Over sea, α may be taken as 0.0015; recent tests over land (Berlin-Hanover-Amsterdam, Fig. 18) show that for wavelengths round 2 000 m the value of α approaches that for over sea, and that it has a *maximum* (well over 0.01) at 500 m.

Further investigation is necessary to decide whether the above is a result of Heaviside layer action or of the inapplicability of the exponential law. Section (5) shows how the results given in the previous sections can be combined for the calculation of a service, with the aid of curve sheets based on existing German aircraft transmitters (Figs. 20 and 21) and on reception tests in aircraft (Fig. 22). Direction-finding requirements are dealt with briefly at the end.

FROM CROYDON TO THE CAPE.—R. F. Durrant. (*Wireless World*, 26th August, 1932, Vol. 31, pp. 177–179.)

A short description of the wireless chain on the new Empire Air Route.

RUNDFUNK-VERSUCHE IN AMSTERDAM AUF EINER WELLENLÄNGE VON 7.85 METER (Broadcasting Tests in Amsterdam on a 7.85-Metre Wave).—P. J. H. A. Nordlohne: Philips' Company. (*Hochf.tech. u. Elek. akus.*, Aug., 1932, Vol. 40, No. 2, pp. 47–55.)

On the tests referred to in July Abstracts, pp. 396–397. The paper begins with a survey of the work done in various other countries and then summarises the Amsterdam results as follows:—A local broadcast service in a large town on a wave between 7 and 8 metres can be satisfactorily supplied, for simple receivers [or "adaptors" to ordinary receivers], by a station with an aerial power between ¼ and ½ kw. Reception is distinguished by an absolutely quiet background: motor-car ignition disturbance (usually limited to 20 metres from the source) is more frequent in the centre of the town, but here the signals are so strong that the receiver reaction can be so un-critical that disturbance can generally be avoided. The use of 10 000 ohm resistances between sparking plugs and leads and at the distributor prevents all production of interference: often only the resistance at the distributor is necessary.

The paper then describes the seven-stage transmitter. The use of tourmalin crystals being unknown at the time, quartz was used with quadruple frequency doubling. The advantages of the screen-grid transmitting valves (Sept. Abstracts, pp. 527–528) are discussed. The quality of transmission was thought at first to be unsatisfactory, but the trouble was traced to the receiving apparatus, and with suitable receivers the transmitter quality was found to be as good in every way as that of the better ordinary broadcasting stations. Receivers are discussed in the next section: their design demands special care, but this does *not* involve high cost. One of the most important things to guard against is hand effect, especially in superheterodyne receivers. The simple reaction-detector adaptor (to the pick-up terminals of the ordinary receiver) is satisfactory at from 1 to 2 km with a 3-metre indoor aerial on the ground floor; at 4 to 5 km a superheterodyne adaptor is satisfactory, though it has the defect that for some fifteen minutes after switching on, its tuning is liable to "creep" owing to the gradual temperature rise of the oscillator valve, etc. The fifteen-minutes delay applies to indirectly heated valves; the use of these is, however, essential for an a.c. mains adaptor, to avoid hum, so that it is necessary to switch on in advance. Other special points in this type of adaptor are discussed. The super-regenerative receiver is mentioned: its disadvantage is background noise, its advantages are simplicity of adjustment (owing to non-critical tuning) and absence of hand effect.

The final section deals with the transmission conditions of the Amsterdam tests, and with the proposals to avoid the difficulties of superheterodyne reception by the transmission of an auxiliary heterodyning wave or by high-frequency modulation, itself modulated at audio-frequencies, of the ultra-short wave. Both proposals are dismissed as impracticable.

ULTRA-SHORT-WAVE BROADCASTING: UNSATISFACTORY RESULTS AND THE NEED FOR BETTER RECEIVERS.—von Ardenne. (*See* abstract under "Reception.")

THE NEW SWISS BROADCASTING STATION [SOTTENS, NEAR LAUSANNE]: THE SWISS BROADCAST NETWORK.—F. C. McLean: A. Muri. (*Elec. Communication*, July 1932, Vol. 11, No. 1, pp. 3–8: 9–12.)

MEDIUM WAVE RECEIVER FOR BROADCASTING RELAY.—(*Bull. de la S.F.R.*, May–June–July, 1932, Vol. 6, No. 4, pp. 76–82.)

STANDARD BROADCASTING LAND LINE EQUIPMENT.—A. R. A. Rendall and J. S. Lyall. (*Elec. Communication*, July, 1932, Vol. 11, No. 1, pp. 13–21.)

FREQUENCIES OF EUROPEAN BROADCASTING STATIONS MEASURED AT THE BRUSSELS LABORATORY OF THE U.I.R.—(*World Radio*, 19th Aug., 1932, Vol. 15, pp. 370–371: a monthly feature.)

DAS SYSTEM MIT VERBREITERTEM SEITENBAND FÜR KURZWELLEN - FERNSPRECHVERBINDUNGEN (The "Spread Side-Band" System for Short-wave Telephony Communications [Madrid-Buenos Aires Services]).—L. T. Hinton. (Summary in *Physik. Ber.*, 15th June, 1932, Vol. 13, No. 12, pp. 1161–1162.) *See* January Abstracts, pp. 35–36.

GENERAL PHYSICAL ARTICLES.

UNIFIED THEORY OF GRAVITATION AND ELECTRICITY: PART II.—A. Einstein and W. Mayer. (Summary in *Physik. Ber.*, 16th Aug., 1932, Vol. 13, No. 16, pp. 1467–1468.)

THE RELATIONSHIP OF GRAVITATION AND ELECTROMAGNETISM.—W. A. Tripp. (*Phys. Review*, 15th June, 1932, Series 2, Vol. 40, No. 6, p. 1028.)

Abstract only. "The law of gravitation is deduced on a purely electromagnetic basis." Gravitation is found to be "the statistical residue of electromagnetic attraction and repulsions on all the individual particles of matter in a body, the attractive forces predominating."

THE MAGNETIC PERMEABILITY OF SPACE AND THE THEOREMS OF M. CHIPART.—J. Cayrel: Chipart. (*Comptes Rendus*, 1st Aug., 1932, Vol. 195, pp. 366–368.)

THE SOLUTION OF STEADY-STATE PROBLEMS IN DIELECTRIC, MAGNETICALLY PERMEABLE, AND CONDUCTING MEDIA, WITH SPECIAL REFERENCE TO MATHEMATICAL ANALOGIES BETWEEN MAGNETIC PROBLEMS AND CURRENT-FLOW PROBLEMS.—W. F. G. Swann. (*Journ. Franklin Inst.*, Feb., 1932, Vol. 213, No. 2, pp. 155–170.)

INFLUENCE OF THE ELECTRICAL DISCHARGE ON THE SECONDARY EMISSION FROM THE CATHODE.—W. J. Jackson. (*Phys. Review*, 15th June, 1932, Series 2, Vol. 40, No. 6, p. 1043.)

ELECTRICAL DISCHARGES IN GASES AT LOW PRESSURES.—I. Langmuir. (*Journ. Franklin Inst.*, Sept., 1932, Vol. 214, No. 3, pp. 275–298.)

A summarising account of the present knowledge of the properties of the plasma and sheaths which form in an electrical discharge through gases at low pressures. The behaviour of electrons and positive ions, when present in relatively large numbers, is analysed, and the fields set up by their motions are shown to account for many of the fundamental phenomena observed.

STEP-LESS AND STEP-BY-STEP DISCHARGE IN AIR ACCORDING TO NEW OSCILLOGRAMS.—W. Krug : Rogowski. (*Zeitschr. f. tech. Phys.*, No. 8, Vol. 13, 1932, pp. 377–383.)

Krug's new results here described reconcile the conflicting views referred to in July Abstracts, p. 421.

RADIOACTIVE DISINTEGRATION.—W. Heisenberg. (*Science*, 26th Aug., 1932, Vol. 76, Supp., p. 8.)

A new theory of radioactivity suggesting that the nucleus of an atom consists exclusively of protons and neutrons. In heavy elements there is too great a proportion of neutrons and the nucleus is therefore unstable. At intervals this instability causes a neutron to split, and its electron is ejected whilst the proton remains. Two neutrons ejected together constitute an alpha particle.

FURTHER EXPERIMENTAL DATA ON THE ELECTROSTATIC AND MAGNETIC COMPONENTS IN THE ELECTRODELESS DISCHARGE.—C. T. Knipp and V. M. Smith. (*Phys. Review*, 15th June, 1932, Series 2, Vol. 40, No. 6, p. 1046.)

ELECTRODELESS DISCHARGES.—J. S. Townsend. (*Phil. Mag.*, April, 1932, Series 7, Vol. 13, No. 86, pp. 745–759.)

DISCHARGES MAINTAINED BY ELECTRICAL OSCILLATIONS IN SOLENOIDS.—G. D. Yarnold. (*Phil. Mag.*, June, 1932, Series 7, Vol. 13, No. 88, pp. 1179–1186.)

The author concludes that "the force inside a solenoid which is sufficient to start a discharge, or to maintain a small current in the gas, is mainly electrostatic . . . In experiments where large currents are maintained in the gas the electromagnetic force may become comparable with the electrostatic force."

THE CHANGES IN ELECTRICAL CONDUCTIVITY OF FERROMAGNETIC SUBSTANCES IN MAGNETIC FIELDS: COMPREHENSIVE SURVEY.—O. Stierstadt. (*Zeitschr. f. tech. Phys.*, No. 2, Vol. 13, 1932, pp. 65–71.)

ON THE EQUATIONS OF LAPLACE AND MAXWELL.—K. F. Herzfeld. (*Phys. Review*, 1st Feb., 1932, Series 2, Vol. 39, No. 3, pp. 497–503.)

This paper contains an attempt "to deduce the equations of electrostatics and of electromagnetics from general axioms instead of quantitative experiments."

THEORIE DER SEKUNDÄRELEKTRONENEMISSION AUS METALLEN (Theory of Secondary Electron Emission from Metals).—H. Fröhlich. (*Ann. der Physik*, 1932, Series 5, Vol. 13, No. 2, pp. 229–248.)

THE NATURE OF ELECTRICAL CONTACT BETWEEN METALS.—T. H. Osgood and E. Hutchisson. (*Phys. Review*, 1st April, 1932, Series 2, Vol. 40, No. 1, p. 129.)

ORIENTATED ATOMS IN A VARIABLE MAGNETIC FIELD.—E. Majorana. (Summary in *Sci. Abstracts, Sec. A*, Aug., 1932, Vol. 35, No. 416, pp. 755–756.)

EFFECT OF NUCLEAR SPIN ON POLARISATION OF RADIATION EXCITED BY ELECTRON IMPACT.—W. G. Penney. (*Proc. Nat. Acad. Sci.*, March, 1932, Vol. 18, pp. 231–237.)

THE FORM OF POTENTIAL BARRIER AT THE SURFACES OF CONDUCTORS.—A. T. Waterman. (*Phys. Review*, 1st Aug., 1932, Series 2, Vol. 41, No. 3, p. 395 : abstract only.)

TOTAL SECONDARY ELECTRON EMISSION FROM METAL FACES.—S. R. Rao. (*Phys. Review*, 1st Aug., 1932, Series 2, Vol. 41, No. 3, pp. 374–375.)

This note draws attention to the probable dependence of the secondary electron emission from metal faces, due to an incident beam of primary electrons, on the grating constant of the crystal face presented for bombardment.

SECONDARY ELECTRON EMISSION FROM A NICKEL SURFACE PRODUCED BY POSITIVE IONS OF MERCURY.—R. M. Chaudhri. (*Proc. Camb. Phil. Soc.*, July, 1932, Vol. 28, No. 3, pp. 349–355.)

DIFFRACTION OF ELECTRONS BY SINGLE CRYSTALS : THE CASE OF PARAFFIN AND THE SATURATED FATTY ACIDS.—J. J. Trillat and Th. v. Hirsch. (*Comptes Rendus*, 18th July, 1932, Vol. 195, pp. 215–217.)

DER HALLEFFEKT IN WISMUTEINKRISTALLEN (The Hall Effect in Single Bismuth Crystals).—H. Verleger. (*Zeitschr. f. Physik*, 1932, Vol. 76, No. 11/12, pp. 760–765.)

THE HALL EFFECT [IN TELLURIUM] WITH AUDIO-FREQUENCY CURRENTS.—L. A. Wood. (*Phys. Review*, 15th July, 1932, Series 2, Vol. 41, No. 2, pp. 231–238.)

LEITFÄHIGKEIT DER DIELEKTRISCHEN FLÜSSIGKEITEN (Conductivity of Dielectric Fluids [Summarising Report]).—A. Nikuradse. (*Physik. Zeitschr.*, 1st Aug., 1932, Vol. 33, No. 15, pp. 553–575.)

THE BREAKDOWN OF THE LIQUID DIELECTRIC.—Nikuradse. (*See* under "Phototelegraphy and Television.")

ÜBER DIE STROMLEITUNG IN DIELEKTRISCHEN FLÜSSIGKEITEN (On the Conduction of Current in Liquid Dielectrics).—W. O. Schumann. (*Zeitschr. f. Physik*, 1932, Vol. 76, No. 11/12, pp. 707–719.)

THE THEORY OF ELECTROLYTIC POLARIZATION.—H. Fricke. (*Phil. Mag.*, Aug., 1932, Series 7, Vol. 14, No. 90, pp. 310–318.)

FLÜSSIGKEITSSTRÖMUNGEN UND RAUMLADUNG AN DRAHTELEKTRODEN IM WASSER (Liquid Currents and Space Charge round Wire Electrodes in Water).—M. Katalinić. (*Zeitschr. f. Physik*, 1932, Vol. 77, No. 3/4, pp. 257–270.)

THE KINETICS OF ELECTRODE PROCESSES. PART I.—DEPOLARISATION EFFECTS BY HYDROGEN AND OXYGEN AT PLATINUM ELECTRODES.—J. A. V. Butler and G. Armstrong. (*Proc. Roy. Soc.*, Sept., 1932, Vol. A 137, No. 833, pp. 604–621.)

A THEORY OF SURFACE CONDUCTANCE AT AN ELECTROLYTE-SOLID INTERFACE.—K. S. Cole. (*Phys. Review*, 1st Aug., 1932, Series 2, Vol. 41, No. 3, p. 387: abstract only.)

MISCELLANEOUS.

GENERALISED DIVISION AND HEAVISIDE OPERATORS: CLASSICISM AND THE ELECTROMAGNETIC EQUATIONS OF LORENTZ.—A. Press. (*Phil. Mag.*, July, 1932, Series 7, Vol. 14, No. 89, pp. 78–86 and 86–96.)

The first paper suggests a "generalised division method" of development of Bessel functions, in contradistinction to the methods of fractional differentiation mainly employed by Heaviside. The second paper discusses the pros and cons of the division of vectors into (*a*) those having divergence and those having curl, as against (*b*) those having divergence and those having circuitality (Heaviside's classification). "It is shown definitely that curl, solenoidality, and circuitality are far from being synonymous terms." The electromagnetic equations of Lorentz are then compared with those of Heaviside, and the writer decides that "to avoid inherent self-contradiction the Heaviside-Maxwell-Hertz equations must be resorted to."

DER SCHWINGKRISTALL UND SEINE TECHNISCHE GESTALTUNG (The Oscillating Crystal and its Technical Form).—E. Habann. (*Physik. Zeitschr.*, 15th Aug., 1932, Vol. 33, No. 16, pp. 615–621.)

An investigation of numerous crystal contacts which have falling scharacteristics over some range and so can generate oscillations.

VOICE FREQUENCY TELEGRAPHY: THE "STENODE" SYSTEM — NEWSPAPER INSTALLATIONS—MAINTENANCE AND CONSTRUCTION—METHOD OF OPERATION.—(*Electrician*, 12th Aug., 1932, Vol. 109, p. 205.)

A NEW PATENTS ACT.—(*Wireless World*, 16th September, 1932, Vol. 31, p. 276.)

The article deals with a new Act which comes into force on 1st November, 1932. *Inter alia*, the Act seeks to extend the area of the official search so as to cover Foreign as well as British Patent Specifications, together with all relevant scientific text books and technical publications. In other words, it is designed to make the British investigation world-wide or universal, as is at present the case in Germany and the U.S.A.

AMATEURS TO CO-OPERATE WITH H.M. FORCES.—(*Wireless World*, 26th August, 1932, Vol. 31, p. 176.)

An official statement issued by the Admiralty in which is announced the institution of a Royal Naval Wireless Auxiliary Reserve (R.N.W.A.R.) in Great Britain and Northern Ireland, to be recruited largely from wireless amateurs owning transmitting sets.

RADIO IN THE FOREST SERVICE [FOR FIRE FIGHTING].—A. G. Simson. (*Scient. American*, Sept., 1932, Vol. 147, No. 3, pp. 152–153.)

ANNUAL CONVENTION OF THE RADIO SOCIETY OF GREAT BRITAIN AND BRITSH EMPIRE RADIO UNION.—(*Electrican*, 2nd Sept., 1932, Vol. 109, p. 288.)

THE RADIO EXHIBITION.—(*Electrician*, 19th and 26th Aug., 1932, Vol. 109, pp. 219–220 and 254–256.)

One of the points noted is the increased attention paid to short wave reception: not only are a number of adaptors shown, but also several firms are providing for the short waves in their ordinary receivers.

PHENOMENA OF LOW FREQUENCY INDUCTION [POWER LINES AND COMMUNICATION LINES].—National Electric Light Association. (Summary in *Rev. Gén. de l'Élec.*, 30th July, 1932, Vol. 32, p. 34 D.)

MUTUAL IMPEDANCE OF GROUNDED WIRES ABOVE THE SURFACE OF THE EARTH.—Foster. (*See* under "Aerials and Aerial Systems.")

A SENSITIVE RADIATION METER USING A BIMETALLIC STRIP [THIN QUARTZ WITH BISMUTH COATING].—M. Weingeroff. (*Physik. Zeitschr. der Sowjetunion*, No. 2, Vol. 1, 1932, pp. 304–306.)

RADIATION EFFECT (DECREASING THE DELAY TIME OF A SPARK DISCHARGE) FROM A DISCONNECTED MERCURY VAPOUR QUARTZ GLASS LAMP.—Heyne, Meyer and Otto. (*Zeitschr. f. tech. Phys.*, No. 9, Vol. 13, 1932, pp. 407–408.)

LIGHT-SENSITIVE CELLS IN THE SERVICE OF MAN.—F. H. Constable. (*Journ. Roy. Soc. Arts*, 13th May, 1932, Vol. 80, pp. 629–653.)

Photo-conducting cells—Case thalofide cell, selenium (Radiovisor) cell. Photoelectric cells, vacuum and gas-filled. Photo-voltaic cells—commercial Rayfoto cell. Applications. In the discussion, Blake mentions the recent development of a small, improved edition of the Fournier d'Albe "optophone" for the blind, costing about £10.

PRINT READING BY THE BLIND.—Thomas. (*Electrician*, 26th Aug., 1932, Vol. 109, p. 253.)

On the device referred to in Sept. Abstracts, p. 540—Henri: Naumberg: Thomas.

PHOTOCELLS FOR REPLACING HAND PICKING IN THE FINAL CLEANING OF COAL.—(*Electronics*, Aug., 1932, p. 267.)

A great difficulty is that wet slate has so nearly

the same colour as coal that the cell cannot discriminate between them.

THE USE OF BARRIER-LAYER PHOTOCELLS FOR REFLECTION AND OTHER MEASUREMENTS IN A GLASS-WORKING LABORATORY: AND A SIMPLE PHOTOELECTRIC MICROPHOTOMETER.—B. Lange. (*Sprechsaal*, No. 16, Vol. 65, 1932, pp. 293–294.)

PHOTOELECTRIC RELAYS.—W. R. King. (*Gen. Elec. Review*, Aug., 1932, Vol. 35, pp. 445–448.)

PHOTOELECTRIC RELAY FOR A.C. OR D.C. MAINS [WITH LIGHT SOURCE BRIDGING UP TO 20 METRES].—AEG. (*E.T.Z.*, 18th Aug., 1932, Vol. 53, No. 33, inset p. 15.)

PAPERS ON PHOTOELECTRIC TELEMETERS.—A. J. Johnston and T. A. Busby. (*Elec. World*, 27th Feb. and 25th June, 1932, pp. 414 and 1089.)

PHOTOCELLS PROTECT PUBLIC FROM POWER-OPERATED DOORS [OF LIFTS, ETC.].—C. E. Ellis. (*Elec. World*, 5th March, 1932, p. 464.)

ARCHAEOLOGISTS PUT PHOTOELECTRIC TUBE TO NEW USE [CLASSIFICATION OF SPECIMENS ACCORDING TO GEOLOGICAL AREA, BY ULTRA-VIOLET RAY ANALYSIS.].—(*Elec. World*, 13th Feb., 1932, p. 305.)

AUTOMATIC EGG-CANDLING [FRESHNESS TEST] MACHINE USES PHOTOCELL.—W. C. Ferris. (*Electronics*, July, 1932, p. 228.)

SUCCESSFUL DESIGN OF A PHOTOELECTRIC POLARIMETER.—G. Bruhat and P. Chatelain. (*Comptes Rendus*, 1st Aug., 1932, Vol. 195, pp. 370–372.)

THE AUTOMATIC RECORDING OF LIGHT-DISTRIBUTION CURVES BY THE USE OF PHOTOCELLS.—W. Little and H. I. Eckweiler. (Summary in *E.T.Z.*, 1st Sept., 1932, Vol. 53, No. 35, p. 844.)

FURTHER RESEARCH ON ELEMENT 87 [MAGNETO-OPTICAL METHOD].—Allison, Bishop, Sommer and Christensen. (*Journ. Am. Chem. Soc.*, No. 2, Vol. 54, 1932, pp. 613–615.)

See Abstracts, July, p. 422, and October, p. 601.

THE RECTIFIER BRIDGE AND ITS USE IN ULTRA-MICROMETER CIRCUITS.—Walter. (*See* abstract under "Measurements and Standards.")

MEASURING INSTRUMENTS AND PROCESSES FOR INTERCHANGEABLE PARTS [ULTRA-OPTIMETER, ETC.].—G. Berndt. (Summary in *Physik. Ber.*, 15th May, 1932, Vol. 13, No. 10, pp. 932–933.)

REPLACEMENT OF A MECHANICAL VIBRATING SYSTEM BY AN EQUIVALENT ELECTRICAL CIRCUIT [IN STUDY OF DIESEL ENGINE VIBRATION].—F. J. Domerque. (*Zeitschr. f. Fernmeldetech.*, No. 2, Vol. 13, 1932, pp. 30–31.)

A PIEZOELECTRIC METHOD OF MEASURING THE PRESSURE VARIATIONS IN INTERNAL COMBUSTION ENGINES.—H. G. I. Watson and D. A. Keys. (*Canadian Journ. Res.*, No. 3, Vol. 6, 1932, pp. 322–331.)

BALLISTIC GAS PRESSURE MEASUREMENTS WITH PIEZOELECTRIC INDICATOR AND CATHODE-RAY OSCILLOGRAPH.—H. Joachim and H. Illgen. (Long summary in *Physik. Ber.*, 15th July, 1932, Vol. 13, No. 14, pp. 1293–1294.)

RECORDING THE INSTANTANEOUS PRESSURES IN FIRE-ARMS BY A PIEZOELECTRIC INSTRUMENT.—C. T. Ervin. (*Journ. Franklin Inst.*, May, 1932, Vol. 213, pp. 503–514.)

THE PENETRATION OF ALTERNATING MAGNETIC FLUX IN WIRE ROPES [IN CONNECTION WITH TESTING FOR MECHANICAL FLAWS].—T. F. Wall and C. H. Hainsworth. (*Journ. I.E.E.*, Aug., 1932, Vol. 71, No. 428, pp. 374–379.)

Arising from the testing method referred to in 1929 Abstracts, p. 650.

ELECTRONIC SPEED AND ACCELERATION RECORDER.—H. M. Partridge. (*Electronics*, Aug., 1932, p. 262.)

THYRATRONS CONTROL 3 500-LB. STEAM BOILERS.—(*Electronics*, Aug., 1932, p. 261.)

THERMIONIC SEISMOGRAPH.—(Patent summary in *Electronics*, Aug., 1932, p. 273: Petty.)

APPLICATION OF ELECTRICAL METHODS OF PROSPECTING TO THE STUDY OF THE FOUNDATIONS OF DAMS, ETC.—M. Lugeon and C. Schlumberger. (*Génie Civil*, 6th Aug., 1932, Vol. 101, pp. 134–137.)

See also Schlumberger and Léonardon, summary in *Re . Gén. de l'Élec.*, 27th August, 1932, Vol. 32, p. 254.

THE DIELECTRIC CONSTANTS OF COLLOIDAL, BIOLOGICAL SUB-STRATA [SERUM, ETC.; WAVELENGTHS 10–30 METRES].—C. Albrecht. (Summary in *Physik. Ber.*, 1st Aug., 1932, Vol. 13, No. 15, p. 1429.)

THE "CHIROTHERM": IMPROVED APPARATUS FOR BLOODLESS SURGERY [H.F. ELECTRIC SCALPEL].—Messrs. Watson and Sons. (*Elec. Review*, 29th April, 1932, Vol. 110, p. 632.)

EXPERIMENTS ON FLUIDS OSCILLATING UNDER THE INFLUENCE OF ALTERNATING ELECTROMAGNETIC FIELDS.—B. Claus. (*Zeitschr. f. Physik*, 1932, Vol. 77, No. 7/8, pp. 553–562.)

RADIOTHERMY [SURVEY WITH 25 LITERATURE REFERENCES].—W. R. Whitney. (*Gen. Elec. Review*, Aug., 1932, Vol. 35, pp. 410–412.)

THE INFLUENCE OF AN ARTIFICIAL ELECTRICAL ATMOSPHERE ON THE RISING OF SAP.—N. Marinesco. (*Comptes Rendus*, 11th July, 1932, Vol. 195, pp. 178–181.)

A NEW METHOD OF PREPARING COLLOIDAL SILVER AND GOLD BY MEANS OF A CONTINUOUS HIGH FREQUENCY ELECTRICAL DISCHARGE.—A. N. Fraser and J. Gibbard. (*Canadian Journ. of Res.*, Aug., 1932, Vol. 7, No. 2, pp. 133–136.)

ON SOME PROPERTIES OF THE ELECTRET.—T. Tiku: Eguchi. (Summary in *Physik. Ber.*, 15th June, 1932, Vol. 13, No. 12, p. 1148.)

Some Recent Patents.

The following abstracts are prepared, with the permission of the Controller of H.M. Stationery Office, from Specifications obtainable at the Patent Office, 25, Southampton Buildings, London, W.C.2, price 1/- each.

BAND-PASS CIRCUITS.

Convention date (U.S.A.), 19th November, 1929. No. 372739.

A band-pass input consists of an inductance L shunted by a condenser C, Fig. (*a*), in combination with a second condenser C_1 shunting the first coil L in series with an extension coil L_1. The frequency-response curves of this arrangement are

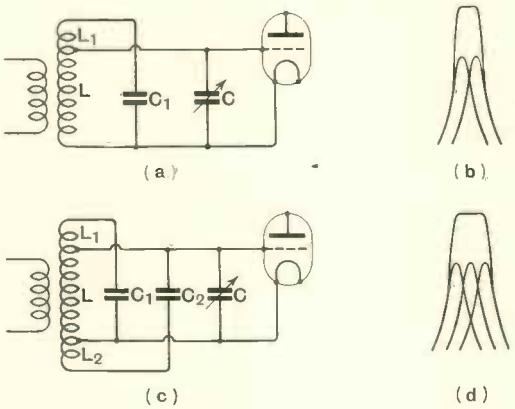

No. 372739.

shown in Fig. (*b*). The arrangement may be extended to give a combination of three tuned circuits by adding a lower extension L_2 to the common inductance coil L, as shown in Fig. (*c*), and shunting both L and L_2 by a second condenser C_2. The equivalent band-pass effect is shown in Fig. (*d*). The condensers C_1 and C_2 may be replaced by the shunt capacities across the turns of two closely-wound inductance coils.

Patent issued to Dubilier Condenser Co. (1925), Ltd.

Application date, 16th February, 1931. No. 373142.

The input circuit comprises two main tuning-coils which are coupled together (a) through a condenser and (b) through a pair of auxiliary coils. The coil coupling is arranged to be in the same sense as that through the condenser, so that the effective coupling remains constant throughout the entire tuning range. The coupling-condenser is shunted by a resistance and the auxiliary coils are so proportioned as to maintain a constant band-width.

Patent issued to W. I. G. Page and W. T. Cocking.

STATION-INDICATOR DIALS.

Application date, 21st January, 1931. No. 373244.

The difficulty of accommodating in a compact set a large-sized dial marked with the names of the various broadcast stations to be received is overcome by arranging it to fit around the periphery of the face of the cone or diaphragm of the self-contained loud speaker. The pointer on the indicator is geared to the spindle of the ordinary tuning-condenser.

Patent issued to E. K. Cole, Ltd., and E. J. Wyborn.

GRID-LEAK RESISTANCES.

Application date, 25th June, 1931. No. 372989.

A strip of paper impregnated or coated with carbon is wound helically upon a core of wax-impregnated cord or string, and connecting-tags of metal are attached at each end to the compound strip. The latter is then enclosed in an insulating tube, the metal tag being bent over the ends of the tube and clamped by end caps forming the outer terminals of the resistance.

Patent issued to Lissen Ld. and W. Walker.

HIGH-IMPEDANCE AMPLIFIERS.

Application date, 25th February, 1931. No. 373622.

Stabilized high-voltage amplification and a straight-line frequency response are features of the resistance-coupled combination shown in the drawing. Two high-impedance valves V, V_1 are connected in parallel across a common H.T. battery, and the combined output is applied across two plate-resistances R, R (each of 5 megohms) to the input of the valve V_2. The signal input is applied across a potentiometer tapping to the grid and filament of the valve V only, the plate of the second valve V_1 being connected through a suitable biasing-battery B to the filament of the valve V_2, which is choke-

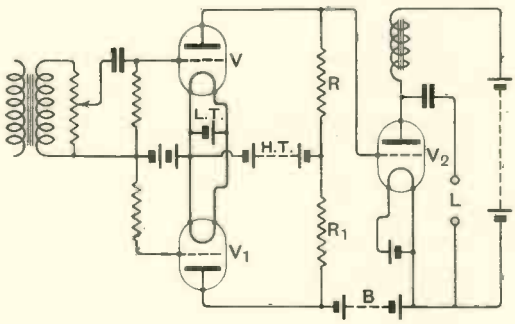

No. 373622.

coupled to the loud-speaker L. The two valves V, V_1 are carefully balanced to eliminate any fluctuations in the common H.T. or L.T. supplies. A similar differential arrangement is described as applied to a photo-electric input and galvanometer output.

Patent issued to C. V. C. Herbert.

AUTOMATIC VOLUME CONTROL.

Convention date (U.S.A.), 16th September, 1930. No. 371745.

The effective bias voltage on the screening grid of an amplifier is automatically increased as the signal voltage on the control grid decreases, and *vice versa*, so as to maintain a constant output irrespective of fluctuations in the strength of the signal input. As shown, the anode voltage is fed through chokes *L*, the screen voltage being applied through dropping resistances *R* of 100,000 ohms. R_1 is a manual volume-control of 2,000 ohms, and R_2 a "bleeder" resistance of 20,000 ohms shunted across the plate and filament. When the control grid is thrown more negative, both the plate and screen-grid currents fall off. The voltage-drop across resistance *R* accordingly diminishes, and increases the positive bias applied to the screening grid, thereby improving the amplification through the valve. As the signal voltage increases, the bias on the screen is reduced and the valve amplification falls off, to ensure a constant level of output.

Patent issued to Marconi's Wireless Telegraph Co., Ltd.

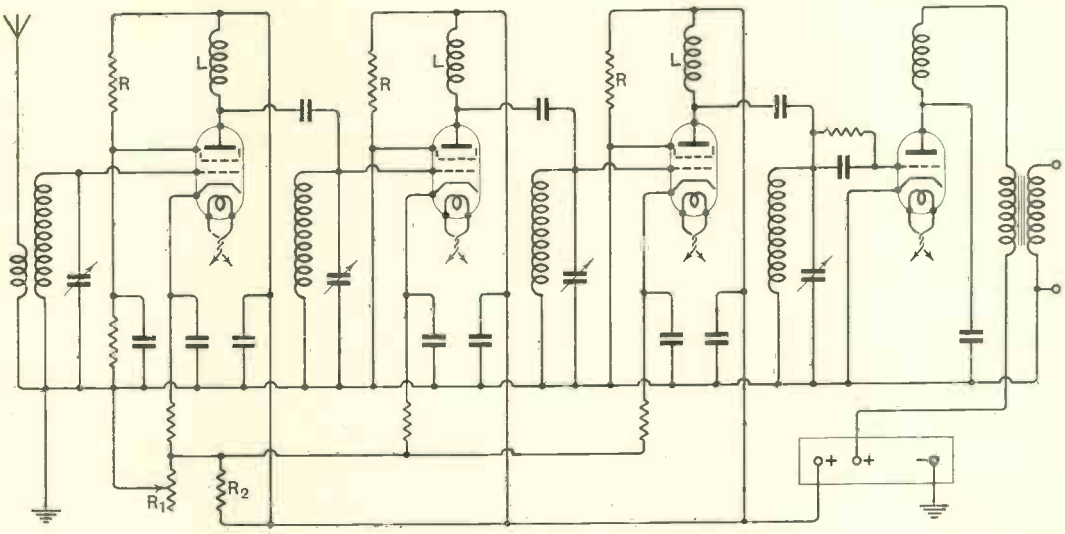

No. 371745.

HIGH-FREQUENCY INSULATION.

Convention date (Germany), 11th April, 1930. No. 373724.

Component parts, such as tuning-coils, and condensers, etc., forming part of the equipment of a short-wave station are suspended from, or mounted on, "coil shaped" metallic conductors. The high reactance of the coils is stated to ensure a more effective protection against "leakage" than ordinary insulation, owing to the large dielectric loss in the latter at very high frequencies.

Patent issued to Telefunken Ges. für Drahtlose Telegraphie m.b.H.

WIRELESS RECEPTION IN TRAINS.

Convention date (U.S.A.), 6th February, 1930. No. 372834.

In order to prevent fluctuations in the received signal strength when the train is passing under steel bridges or near metallic structures, and to avoid the varying directional effect of a single receiving aerial as the train passes around curves, two or more aperiodic aerials are located along the train and are connected to the various receivers through an aperiodic high-frequency amplifier and a loaded transmission line. Selective tuning-means are provided at each receiver.

Patent issued to Marconi's Wireless Telegraph Co., Ltd.

THERMIONIC VALVES.

Application date, 4th February, 1931. No. 372393.

The heating-element and the grid are formed of two flat strips, the cathode being located between them. The electrodes are separated from each other by a coating of insulating material, which does not, however, completely cover the surface of the grid. The arrangement permits extremely close spacing of the electrodes with a corresponding improvement in the operative efficiency of the valve.

Patent issued to P. Freeman.

Application date, 4th February, 1931. No. 372758.

The grid is separated from the cathode, or other adjacent electrode, by an insulating partition, such as an openwork metal structure entirely coated with insulating material. The partition may be attached to one or other of the electrodes, or may be made separately and placed between them. The object is to allow very close spacing of the electrodes.

Patent issued to P. Freeman.

TELEVISION SYSTEMS.

Application date, 18th February, 1931. No. 373196.

It has previously been proposed to secure a three-dimensional or stereoscopic effect by "scanning" the scene to be televised from two different points, spaced apart by the distance between the human eyes, and then viewing the received picture through separate eye-pieces. By contrast, the present scheme consists in scanning the picture at the transmitting end simultaneously from two directions, at right-angles to each other. At the receiving end, the projection screen is made of a thin sheet of paper or gelatine, which is mounted to move to and fro under the control of the received signals at the same time as the picture elements are being re-assembled, the result being a true three-dimensional picture, having thickness as well as surface-area.

Patent issued to J. L. Baird and Baird Television, Ltd.

Application date, 18th February, 1931. No. 371520.

In order to vary the area of the scene to be televised from time to time, without any break in transmission and without altering the relative positions of the object and the scanning-device, a two-lens system of variable focal-length is interposed between the object and the scanning-disc. Owing to the position of the optical system, any change in magnification caused by altering the distance between the two lenses does not involve appreciable overlapping or under-lapping of the scanning strips, so that the televised picture is received in clear detail.

Patent issued to J. L. Baird and Baird Television, Ltd.

VARIABLE-SELECTIVITY CONTROL.

Convention date (U.S.A.), 12th November, 1930. No. 373543.

The object of the invention is to enable the selectivity of a receiver to be varied at will, so that when receiving a station through severe interference only a narrow band of frequencies is "accepted" by the circuits. When ether conditions admit, the tuning is readjusted to accept

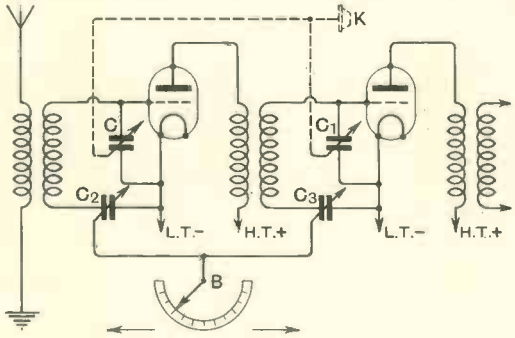

No. 373543.

a broader band, giving better quality. As shown the tuning condensers C, C_1 are ganged to a single knob K as usual. The condensers C_2, C_3 controlling the band-width are ganged "in reverse," that is to say, as the value of C_2 increases that of C_3 decreases, as indicated by the arrows. The result is that as the band-width changes, the "centre" of resonance remains unaltered. The control handle B is associated with a graduated scale, settings on the left giving extreme selectivity, and those on the right less selectivity but better quality.

Patent issued to Marconi's Wireless Telegraph Co., Ltd.

WIRELESS DIRECTION FINDING.

Application date, 24th March, 1931. No. 374182.

In order to enhance the sharpness of the directional effect on "maximum" reading—which is usually less critical than that given by the "minimum"

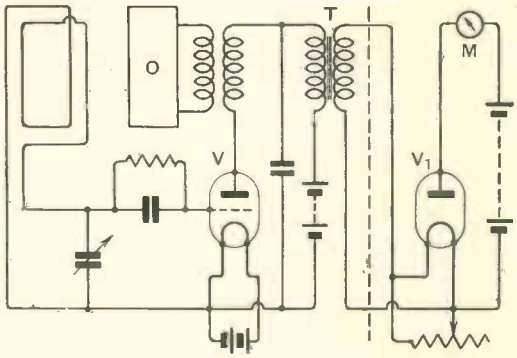

No. 374182.

method—the rectified signal is applied to the cathode circuit of a diode valve. It is stated that the output effect attained in this way is of the order of the fourteenth power of the input. As shown the received signals are rectified in the valve V, the output of which is applied through a transformer T to control the electronic emission from the filament of a diode valve V_1. The resulting plate current controlling the indicating-ammeter M is of the order stated. A local heterodyne source O is utilized for CW signals. One or more amplifying stages may be interposed between the rectifier V and diode V_1.

Patent issued to N. F. S. Hecht.

ACOUSTIC STUDIOS.

Convention date (U.S.A.), 6th May, 1930. No. 373380.

In order to maintain "liveness" for frequencies below 300 cycles, and to eliminate the long reverberation time for frequencies above 600 cycles, the walls of the studio are provided with sound diffusing or deflecting areas, arranged to scatter the high-frequency sound-waves in accordance with Rayleigh's theory, so as to prevent prolonged to-and-fro reflection. The sound-diffusers consist of a series of slats forming V-shaped slots located at intervals along the walls. Layers of sound-absorbing material are arranged on the ceiling and floor.

Patent issued to Electrical Research Products Inc.

CATHODE-RAY OSCILLOGRAPHS.

Application date, 16th March, 1931. No. 374529.

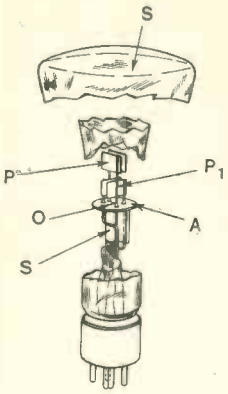

No. 374529.

A hair-pin cathode (not shown) consists of two flat strips joined by a small square end-portion which is the only part to be coated with emissive material. The cathode is housed inside a positively-charged cylindrical shield *S*, whilst the anode consists of a flat disc *A* with a central aperture *O*. The arrangement forms an electron "gun," producing an intense and clear-cut spot on the viewing-screen *S*. Upper and lower deflecting plates *P*, P_1 are arranged across the path of the discharge stream as usual.

Patent issued to Standard Telephones & Cables, Ltd., L. H. Bedford, and D. G. Coveney.

HETERODYNE RECEIVERS.

Convention date (U.S.A.), 30th October, 1930. No. 372692.

Uni-control in a heterodyne receiver may be secured by keeping the natural period of the local oscillator at the same frequency as the tuned input circuits, and modulating the output from the oscillator with a frequency equal to the intermediate frequency. In order to ensure synchronism between the input and oscillator circuits, the invention consists in suppressing one of the two side-band frequencies produced by the modulation of the local oscillator, and using only the remaining side-band. As shown, the tuning condensers *C*, C_1, and the tuning condenser C_2 of the local oscillator *V*, are all ganged to the same frequency. In order to produce radio-frequency voltages differing from the signal frequency by a constant amount, the output circuit of the valve *V* is modulated by an oscillating valve V_1 which generates oscillations of a frequency equal to that at which the intermediate frequency amplifier 1FA is tuned. The modulation frequencies are then fed from a coil *L* to the input of the second valve, through a filter *F* which suppresses one side-band and passes the other.

Patent issued to Marconi's Wireless Telegraph Co., Ltd.

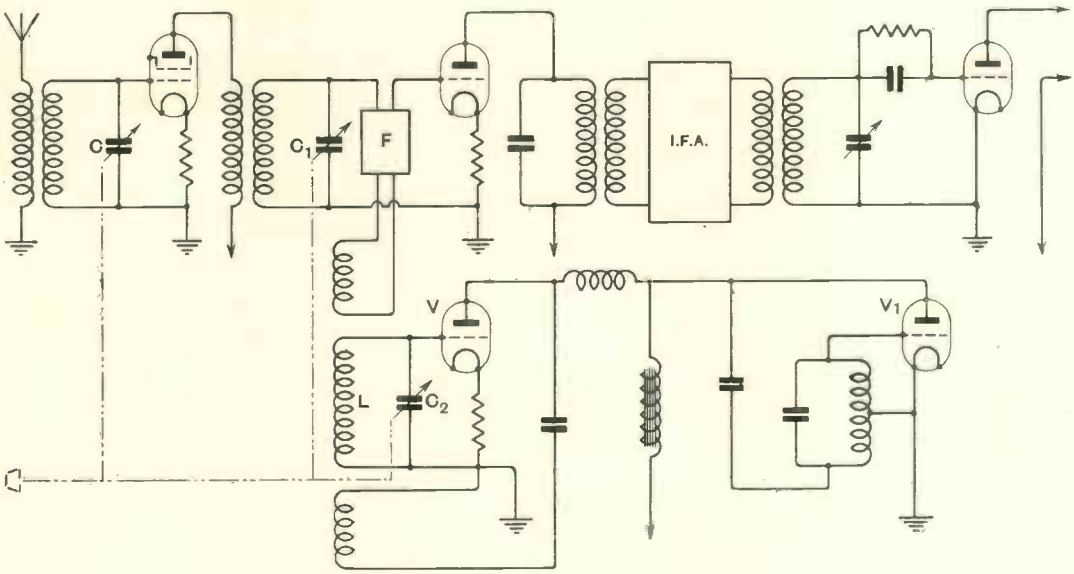

No. 372692.

SELF-CONTAINED SETS.

Convention date (Germany), 24th June, 1930. No. 372604.

In order to reduce the undesirable effect on the tuning condensers of strong mechanical vibrations set up by the loud-speaker of a self-contained set, a single resilient disc or plate of paper or linen, impregnated with resin, is interposed between the panel and each condenser. The disc is cut away or provided with openings so as to provide a perfectly elastic suspension of the condenser on the panel and also with respect to the indicating dial, whilst ensuring that the scale remains true for all angular positions of the rotor and stator.

Patent issued to Ideal Werke Akt für Drahtlose Telephonie.

OURTH EDITION

HANDBOOK of TECHNICAL INSTRUCTION

or Wireless Telegraphists

By H. M. DOWSETT, M.I.E.E., F.Inst.P., M.Inst.R.E.
Author of "Wireless Telegraphy and Telephony," etc.

PRICE 25/- NET

BY POST 25/9

rom all leading ookseller or direct om the publishers:

LIFFE & SONS Ltd., Dorset House, Tudor Street, London, E.C.4

THIS work constitutes a complete textbook for the use of wireless telegraphists, and provides a full theoretical course for the P.M.G. certificate. Twenty-six Spark and Valve Transmitters are described, and Thirty-three Receivers and Direction Finders.

A leaflet giving synopsis of chapters and other particulars will be sent on request.

W.E.14

JOURNAL OF SCIENTIFIC INSTRUMENTS

produced by the Institute of Physics with the co-operation of the National Physical Laboratory. The English journal devoted to scientific instruments, their principles, construction and use. Essential to designers, makers and users.

CONTENTS OF THE OCTOBER NUMBER.

THE "FINISH" OF SCIENTIFIC INSTRUMENTS. By W. G. Collins.
Modifications in the Haughton-Hanson Thermostat. By J. L. Haughton, D.Sc., F.Inst.P.
An Accurate Viscometer for Volatile and Hygroscopic Liquids. By E. N. da C. Andrade, D.Sc., Ph.D., F.Inst.P., and K. E. Spells.
The Measurement of Solar Radiation. By A. F. Dufton, M.A., D.I.C.
Note on the Correction of Frequency Error in Moving Iron Voltmeters. By R. O. Carter, M.Sc., A.C.G.I., D.I.C.
A Modified Apparatus for Raman Effect. By Balmokand Anand, M.Sc.
New Instruments:
Anti-Microphonic Valves.
A Continuous Carbon Monoxide Indicator.
A Spectograph of Great Intensity.
Laboratory and Workshop Notes:
The Intensification of Photographic Records by Subsequent Exposure to Weak Light Before Development. By W. Hartree and A. V. Hill, Sc.D., F.R.S.
Plate Glass Cells. By W. Pinfold.
Reviews, Catalogues, Notes and Comments. Institute Notes.

The subscription rate for a yearly volume is £1 10s. net (post free) payable in advance. Separate parts 2s. 8d. (post free). Subscriptions should be sent to the publishers.

CAMBRIDGE UNIVERSITY PRESS
Fetter Lane, London, E.C.4 - - - England

Calculation and Measurement of Inductance & Capacity

BY W. H. NOTTAGE, B.Sc.
(1924)

The more generally useful formulæ and methods of measurement of inductance and capacity are here brought together in a convenient form. 224 pages. Over 80 illustrations and diagrams.

Price 7/6. By Post 8/-.

ILIFFE AND SONS LTD.,
Dorset House, Tudor St., London, E.C.4, and leading booksellers.

W.E.12.

PATENTS, ETC.

The Proprietors of British Patents Nos. 263,111 and 274,937, relating to Electric Discharge Tubes, and No. 276,398, relating to Apparatus for Producing Oscillations in Electrical Circuits, are desirous of entering into negotiations with interested parties with a view to the exploitation of the inventions, either by the sale of the Patent Rights or by the granting of Licences on reasonable terms. All enquiries to be addressed to Wm. Brookes & Son, No. 1, Quality Court, Chancery Lane, London, W.C.2. [0236

MISCELLANEOUS.

Measurements undertaken by retired engineer. Condensers, resistances, inductances, wavemeters. Books and Instruments loaned to responsible experimenters. BM/ZLME, W.C.1. [0235

BOOKS on WIRELESS

Write for complete list to
ILIFFE & SONS LTD.,
Dorset House, Tudor St.,
London, E.C.4

TANNOY

HIGH GRADE
SOUND REPRODUCERS
P.A. LOUD SPEAKERS
AND
OTHER EQUIPMENT SUITABLE FOR HOTELS, DANCE HALLS, SPORTS MEETINGS, ETC.

Full Details or Demonstration

1-7, DALTON ST., W. NORWOOD, S.E.27

THE THERMIONIC VALVE AND ITS DEVELOPMENT IN RADIO TELEGRAPHY.

By Sir Ambrose Fleming
M.A., D.Sc., F.R.S., M.I.E.E.
(1924)

A valuable book for all experimenters
Price 15/- net. By post 15/9

ILIFFE & SONS LTD.
Dorset House, Tudor St., London, E.C.4

EDISWAN VACUUM THERMAL DELAY SWITCHES

Unaffected by external temperature changes

As is generally known, the inclusion of a thermal delay switch in the H.T. circuit is a positive safeguard to avoid damage to condensers and other components caused by the application of the H.T. before the valve cathodes have reached operating temperature.

Where hot cathode mercury vapour rectifiers are used under full load current, it is essential that a considerable delay should occur between the switching on of the rectifier cathode and the switching of the H.T. to the rectifier.

Ediswan Vacuum Thermal delay switches possess several important features which render them particularly suitable for this work. Operating in a high vacuum they not only remain unaffected by variations in climatic and local conditions (such as the proximity of large power valves), but the contacts keep entirely free from oxidation. Contact resistance is negligible and no arcing can occur. ***Operating time is variable and filament voltages of from 2 to 8 volts may be employed. Two types are at present available.***

RATING	Type DLS/1	Type DLS/10
Filament Voltage	2-8 volts.	2-8 volts.
Filament current (approx.)	.6 amps.	1.3 amps.
Max. current rating	200 M/a at 2000 volts.	6 amps. at 250 volts.
Time delay (average)	30 secs.	1 minute
	PRICE 7/6	PRICE 17/6

THE EDISON SWAN ELECTRIC CO. LTD. 155 CHARING CROSS RD., LONDON, W.C.2

V.176

Printed for the Publishers, ILIFFE & SONS LTD., Dorset House, Tudor Street, London, E.C.4, by The Cornwall Press Ltd., 1-6, Paris Garden, Stamford Street, London, S.E.1.
Sole Agents for Australasia—Gordon & Gotch (Australasia), Ltd.
Sole Agents for South Africa—Central News Agency, Ltd.